AK 98™ Dialysis Machine

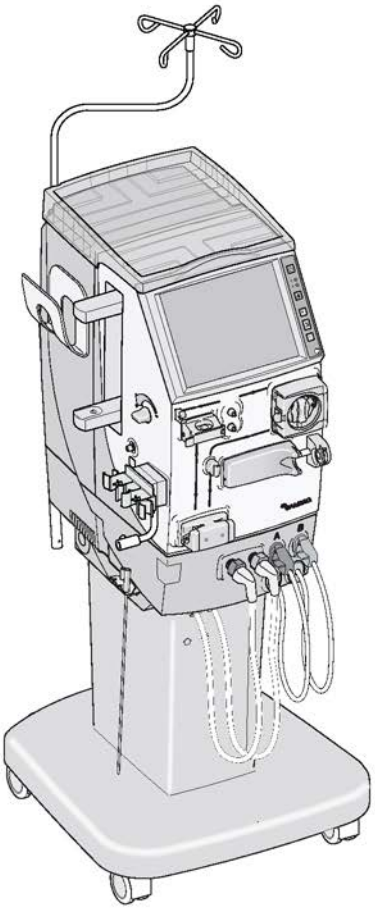

Service Manual

Program version 1.xx

Order number:
MHCEN12630-07/15

© 2015 Gambro Lundia AB. All rights reserved.

Trademarks

Gambro, AK 98, BiCart, CleanCart, Diascan, SoftPac, U 9000, Polyflux, Revaclear and Evodial are trademarks belonging to the Gambro Group.

Dialox is a trademark belonging to Air Liquide Group.

HASTELLOY is a trademark owned by Haynes International Inc.

Manufacturer

Gambro Lundia AB

Box 10101 Magistratsvägen 16

SE-220 10 LUND

Sweden

Phone +46 46 169000

www.gambro.com

Questions or comments about this publication can be directed to your local representative or to the manufacturer.

Table of contents

1 General information

1.1 About this manual

This service manual provides the information needed to install the AK 98 dialysis machine and to carry out maintenance, component replacements, and calibrations. It is a guide for how to identify and repair faults that may occur.

All available spare parts to be used for the AK 98 dialysis machine are found in the illustrated spare parts list.

This service manual also provides a technical description of the functionality of the AK 98 dialysis machine, including technical data.

Questions or comments about this publication can be directed to your local **Gambro Service representative** or to the manufacturer.

1.2 Safety definitions

Warning

WARNING!
A warning alerts the reader about a situation which, if not avoided, could result in an adverse reaction, injury or death.

Caution

CAUTION!
A caution alerts the reader about a situation which, if not avoided, could result in minor or moderate injury to the user or patient or damage to the equipment or other property.

Note

NOTE!
Notes are added to give more information.

1.3 Installation

WARNING!
The initial installation, start up procedure, and maintenance of the AK 98 dialysis machine may only be performed by the Gambro Technical Service organization or a person authorised by Gambro, fulfilling the specified qualifications stated in Section 1.7 “Competence of an authorised service technician” on page 13.

Installation of the machine should be done in accordance with the recommended procedures in Section 2 “AK 98™ Installation guide” on page 19.

When installing a new monitor, please ensure proper reporting in Gambro’s global electronic service reporting system whether there are any deviations or not. This is important information, and it will assist Gambro to improve the product for you.

1.4 Complaint

If a complaint is raised, it shall be communicated to the relevant **Gambro Sales representative**. In order for the representative to be able to determine the relevance of a complaint, it is of vital importance that the deviation is communicated to them as comprehensively as the issue requires.

Complaints are important information and it will assist Gambro to improve the product for you. The Complaint system is not valid for products, components or printed circuit boards that isn't in its original delivered condition.

1.5 Responsibility and disclaimer

The manufacturer accepts responsibility for the safety, reliability, and performance of this equipment only if the following conditions are fulfilled:

- Installation, operational procedures, maintenance, calibrations and repairs are carried out by appropriately trained and suitable qualified people.
- All equipment modifications are authorised in writing by the manufacturer and carried out by appropriately trained and suitable qualified people.
- The electrical installation of the relevant room complies with all applicable local electrical codes and, if applicable, IEC requirements.
- The equipment is used in accordance with the published operator’s manual.

Gambro does not accept any responsibility or liability for use of accessories or disposables other than those specified in this manual or if any specified accessory or disposable is not used in accordance with this manual, online instructions and the instructions for use accompanying those accessories and disposables.

The patient’s physician is responsible for counselling, home care follow-up and medical maintenance that comes with the treatment. Gambro has no responsibility for any of these activities.

1.6 Maintenance

To ensure proper operation of the AK 98 dialysis machine, an authorised service technician shall perform a complete series of maintenance procedures at regular intervals.

The maintenance and calibration information that you need to use is provided in this service manual, refer to Section 8 “Maintenance manual” on page 181 and Section 7 “Calibrations” on page 151.

It is mandatory to perform preventive maintenance at least every second year. Yearly maintenance is recommended. The rate of preventive maintenance may be different due to variations of the operating conditions.

1.7 Competence of an authorised service technician

There is a certain minimum level of competence required for an authorised service technician who maintains and repairs Gambro products, summarized as follows.

An authorised service technician has:

1. attended the AK 98 dialysis machine technical service course and has received a certificate stating that the technician has passed the course
2. access to the test equipment and tools detailed in this service manual
3. access to the AK 98 Spare parts list
4. access to and understanding of the AK 98 operator's manual and the AK 98 service manual

In general, this policy implies that training will be carried out by Gambro Lundia AB, while local markets are responsible for their own service organisation.

1.8 Repair

Parts which are sent for repair shall be sent to the following address:

Gambro Lundia AB
Repair Shop
Magistratsvägen 16
SE-226 43 Lund
Sweden

1.9 Technical support

For technical support, please contact your local **Gambro Service representative**.

1.10 Connection of AK 98 dialysis machine to other electrical equipment

Only an authorized service technician is allowed to connect the AK 98 dialysis machine to other electrical equipment and thus forming an IT-network in the meaning of IEC 60601-1. Connection of the AK 98 dialysis machine to such an IT-network that includes other equipment could result in previously unidentified risks to patients, operators or third parties. The authorized service technician shall together with the clinic identify, analyze, evaluate and control these risks. It shall also be noted that subsequent changes to the IT-network could introduce new risks and require additional analysis.

Changes to the IT-network include:

- changes in the IT-network configuration
- connection of additional items to the IT-network
- disconnecting items from the IT-network
- update of equipment connected to the IT-network
- upgrade of equipment connected to the IT-network

1.11 Waste disposal

For the purpose of protecting the environment, the AK 98 dialysis machine shall be separately collected for dismantling and recovery. Where applicable, national regulations shall be applied. Consult your relevant **Gambro Sales representative** for information.

1.12 Symbols

The symbols can be affixed to the machine or affixed/printed on the original packaging.

	Alternating current
	Protective earth (ground)
	Off (disconnection from the mains power)
	On (connection to the mains power)

	Equipotential connector
IP21	The AK 98 dialysis machine is protected against solid foreign objects ≥12.5 mm Ø and vertically falling water drops.
	Type B, applied part
	NIBP type BF applied part
LATEX	The product does not contain latex. The symbol frame and text are white.
PVC	The product does not contain PVC. The symbol frame and text are white.
10 kg max	The maximum stacking load permitted on the transport package
	Fragile – Handle with care
	This way up
	Keep dry
REF	Catalogue number
SN	Serial number
%	Humidity limitation. Upper and lower limit is expressed with numeric values in %.
	Atmospheric pressure limitation. Upper and lower limit is expressed with numeric values in kPa.
	Temperature limitation. Upper and lower limit is expressed with numeric values in degree Celsius or Fahrenheit.
	Manufacturer. The date of manufacture as well as the name and address of the manufacturer are included in the symbol.
CB	Recycling symbol – Corrugated Cardboard. According to GB 18455–2001.
25	This symbol indicates that the dialysis machine contains toxic or hazardous substances or elements according to GB/T26572-2011. The number 25 indicates the corresponding environmental protection use period of the dialysis machine.
	Separate collection for electrical and electronic equipment
	Warning, dangerous voltage. Contact may cause electric shock or burn. The symbol colour is black on a yellow background.

	Warning. Do not lean the AK 98 dialysis machine more than 5° from the horizontal plane. The symbol colour is black on a yellow background.
	Do not lean or push the AK 98 dialysis machine. Risk for overbalance. The symbol colours are red, white, and black.
kg	The weight of the AK 98 dialysis machine including equipment used for the treatment placed on the machine.
	Caution, consult accompanying documents
	Read instructions before use. The symbol colour is white on a blue background.
The following symbols are found on the cuff:	
INDEX	Index Line
ARTERY	Artery symbol and arrow should be placed over brachial or femoral artery.
	Symbol indicating arm circumference.
RANGE	Cuff index line must fall within range markings.

Cuff ranges/colours

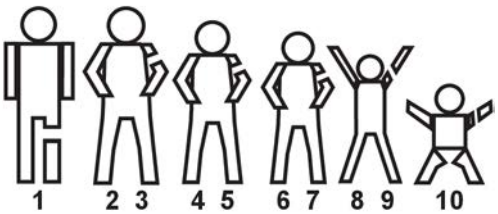

Table 1-1. Cuff ranges/colours

Number:	Size:	Colour:	Range:
1	Thigh	Brown	38-50 cm
2	Lg Adult Long	Burgundy	31-40 cm
3	Lg Adult	Burgundy	31-40 cm
4	Adult Long	Navy Blue	23-33 cm
5	Adult	Navy Blue	23-33 cm
6	Sm Adult Long	Royal Blue	17-25 cm
7	Sm Adult	Royal Blue	17-25 cm
8	Child Long	Green	12-19 cm
9	Child	Green	12-19 cm
10	Infant	Orange	8-13 cm

Certification marks

CE marking

The CE conformity mark indicates that the AK 98 dialysis machine conforms to the requirements in the EC Council Directive 93/42/EEC of 14 June, 1993 concerning medical devices. It also indicates that the notified body British Standards Institution (BSI, No. 0086) has approved the Quality Management System. The CE conformity mark is only valid for the AK 98 dialysis machine. Disposables and any accessories specified for use with the AK 98 dialysis machine are marked with CE conformity marks in their own right.

CSA marking

The CSA mark indicates that the AK 98 dialysis machine conforms to the requirements related to safety of medical devices for Canada and that the AK 98 dialysis machine has been evaluated to the applicable CSA standards for use in Canada.

This page is intentionally left blank.

2 AK 98™ Installation guide

2.1 Before installation

2.1.1 Qualification requirements

The initial installation and start-up procedure of the AK 98 dialysis machine may only be performed by the Gambro Technical Service organization or a person authorised by Gambro fulfilling the specified qualifications in AK 98 dialysis machine - service manual, chapter 1 - Competence of an authorised service technician.

2.1.2 Record of installation

A checklist is provided at the end of this chapter. See Section 2.8 “Installation checklist” on page 43. Fill out the checklist as the installation is performed.

2.1.3 Tools

The tools listed below are recommended for use during the installation procedure:

- Tube cutter, 113500084
- Phillips screwdriver: PH 2, length 175 mm
- Flat screwdriver: 1x5.5 length 175 mm
- A set of Allen keys
- A pair of pliers (for RP installation)

2.1.4 Manufacturer

Gambro Lundia AB
Box 10101
Magistratsvägen 16
SE-220 10 LUND
Sweden
Phone +46 46 169000
www.gambro.com

2.2 Installation procedure

2.2.1 Step 1 - Unpacking the machine

Before you begin

WARNING!
Cables and hoses shall neatly be bundled and secured to avoid the risk of strangulation.

NOTE!
Check that the packaging material is not damaged. If the outer packaging is damaged, file a complaint with the transporter before unpacking the equipment.

NOTE!
All packaging material should be disposed of in accordance with local regulations.

Procedure

1) Unpack the equipment in the order suggested by the numbers in Figure 2-1 “Unpacking procedure” on page 21.

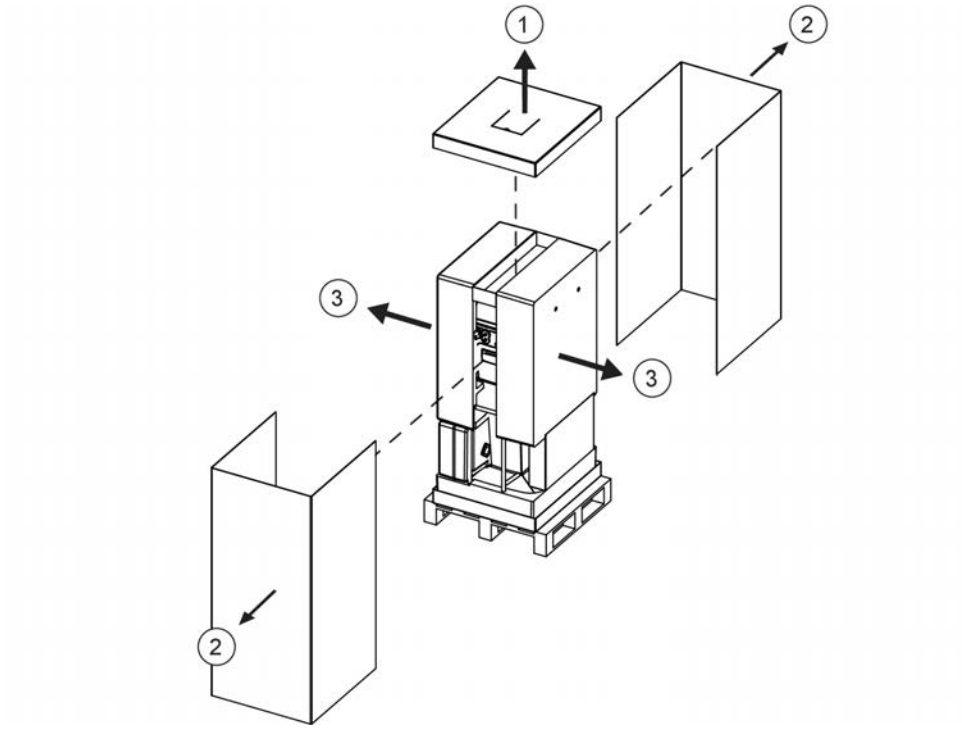

Figure 2-1. Unpacking procedure

2.2.2 Step 2 - Inspection of delivered equipment

Procedure

1) Ensure that the specified equipment has been delivered. Do the packages contain the specified monitor and options? Are there any units/ components missing? If in doubt, contact your local **Gambro Service representative**.
2) Ensure that the voltage specified on the voltage tag matches the mains voltage. If in doubt, contact your local **Gambro Service representative**.
3) Remove the protective plastic from the screen and overlay on hard keys.
4) Check the equipment for any damage. If the equipment is in any way damaged, proper operation cannot be guaranteed. Contact your local **Gambro Service representative**.

! **NOTE!**
In case of damage to the machine, inspect the packaging material. If damaged - save the packaging material and contact your local **Gambro Service representative** for further information.

2.2.3 Step 3 - Remove the machine from the pallet

Procedure

1) Use the lifting points to remove the machine from the pallet. See Figure 2-2 "Lifting points" on page 22.

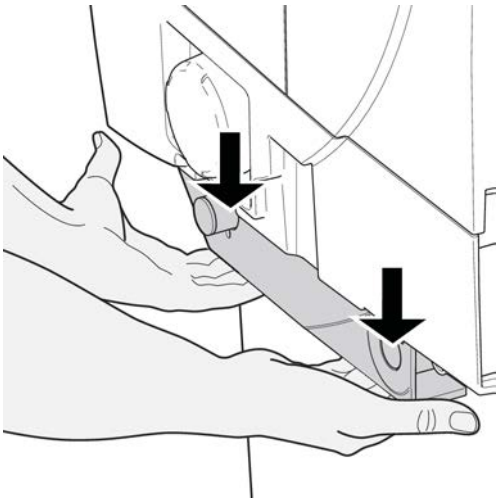

Figure 2-2. Lifting points

NOTE!
Remove the adhesive tape applied to the wheels. It is only used as a transport protection.

2.2.4 Step 4 - Additional package box

Procedure

1) Unpack the additional package box.
2) Check that the box contents correspond to the packing list (inside the box). If in doubt, please contact your local **Gambro Service representative**.

NOTE!
The contents of the additional package box shall correspond to the equipment level of the delivered AK 98 dialysis machine.

NOTE!
The AK 98 operator's manual is included as a PDF-file on the attached CD-ROM (including all available language versions).

NOTE!
A printed version of the AK 98 operator's manual may be ordered from your local **Gambro Service representative**. The order number for each translation of the operator's manual is available in the booklet inside the CD-ROM cover.

Remember to order the correct program version of the manual for your machine.

NOTE!
Two extra fuses for the power supply are included in the additional package box.

2.2.5 Step 5 - Dialyzer connector set, red

Procedure

1) Remove the silicone tube between the dialyzer inlet and outlet (used during transport).
2) Attach the dialyzer connector set according to Figure 2-3 “Dialyzer connector set, red” on page 23.

3) Fasten the dialyzer connector set to the machine according to Figure 2-3 “Dialyzer connector set, red” on page 23.

4) Fasten the red safety coupling to the left coupling on the machine.

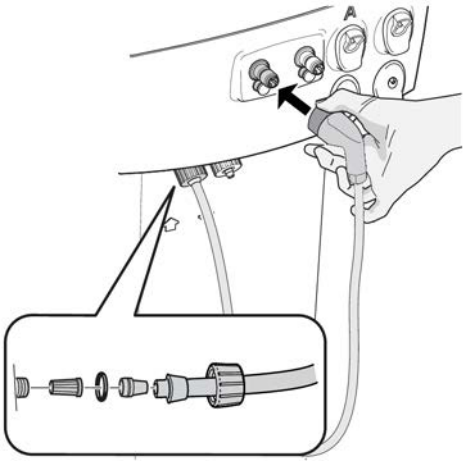

Figure 2-3. Dialyzer connector set, red

2.2.6 Step 6 - Dialyzer connector set, blue

Procedure

1) To install the sample port, connect the sample port (K20219002) to the dialyzer connector set (blue) with clamps (Ø 12 mm) according to Figure 2-4 “Dialyzer connector set, blue” on page 23.

2) Attach the dialyzer connector set according to Figure 2-4 “Dialyzer connector set, blue” on page 23.

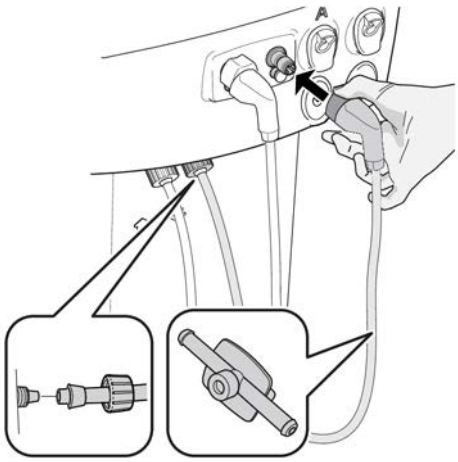

Figure 2-4. Dialyzer connector set, blue

2.2.7 Step 7 - Transportation handle

Procedure

1) Install the transportation handle according to Figure 2-5 “Transportation handle” on page 24.

2) Tighten the screws.

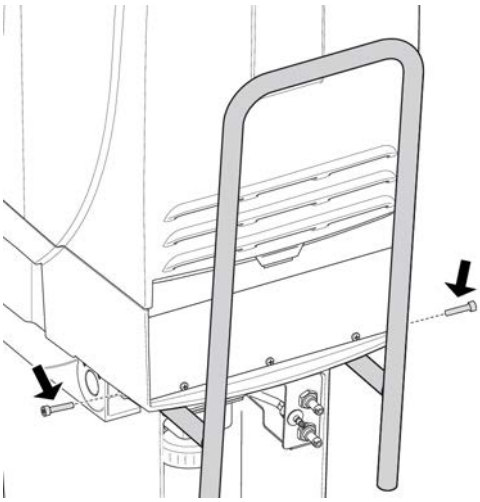

Figure 2-5. Transportation handle

2.2.8 Step 8 - Pick-up tube holder

Procedure

1) Loosen the two screws on the rear of the machine. See Figure 2-6 "Pick-up tube holder" on page 24.
2) Attach the pick-up tube holder.
3) Re-tighten the two screws.

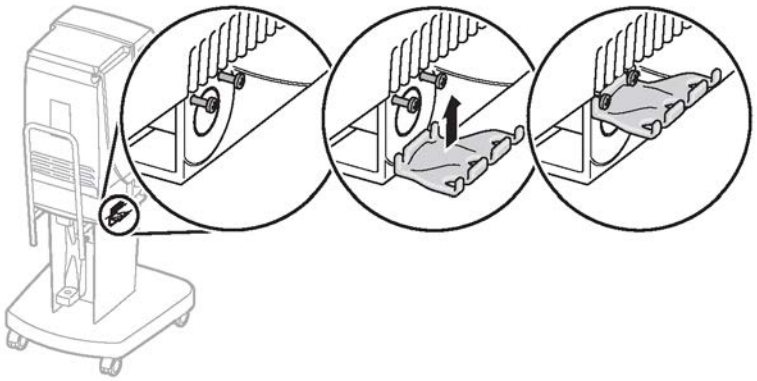

Figure 2-6. Pick-up tube holder

NOTE!
Any of the four positions (two on the left side and two on the right side) may be used for the pick-up tube holder.

NOTE!
If the RP 98 remote panel is to be used, attach the pick-up tube holder using the rear position to the right or the left.

2.2.9 Step 9 - Ultrafilter (option)

WARNING!
Check carefully that there is no leakage from the ultrafilter after changing it.

WARNING!
Before a new treatment can be performed after changing the ultrafilter, the machine must go through a disinfection to ensure the quality of the dialysis fluid.

NOTE!
The ultrafilter (UFD) is not included at delivery of the AK 98 dialysis machine.

NOTE!
Make sure that the ultrafilter is handled in an aseptic way according to the corresponding package insert.

Procedure

1) Pull the handle and press the latch downwards to release the lower part of the ultrafilter holder.
2) Insert the ultrafilter into the holder and push it gently upwards.
3) Push the lower latch into position to close the holder.
4) Put a label on the ultrafilter with the installation date.

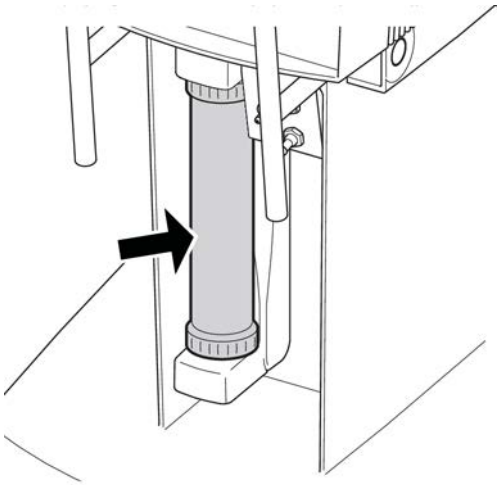

Figure 2-7. Ultrafilter (option)

2.2.10 Step 10 - Dialyzer holder

Procedure

1) Install the dialyzer holder according to Figure 2-8 “Dialyzer holder” on page 26.
2) Install and tighten the knob.

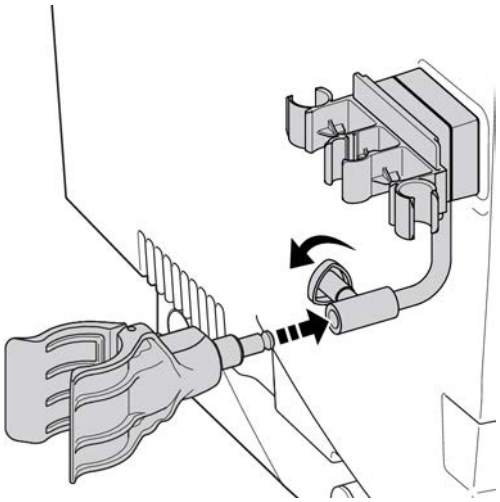

Figure 2-8. Dialyzer holder

2.2.11 Step 11 - Top tray

Procedure

1) Place the top tray on the AK 98 dialysis machine according to Figure 2-9 “Top tray” on page 26.

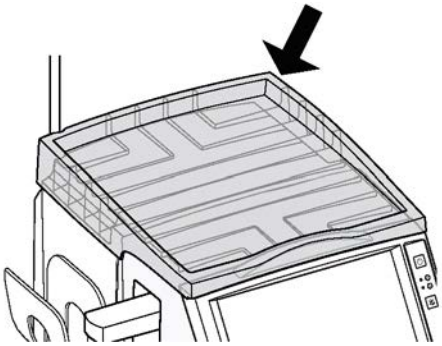

Figure 2-9. Top tray

NOTE!
To avoid leakage into the machine, the top tray shall always be placed on the top of the machine, except during technical service.

2.2.12 Step 12 - BPM: cuff holder and cuff (option)

Procedure

1) Clean the surface of the AK 98 dialysis machine with ethanol (70%) or isopropanol (60%).
2) Mount the cuff holder according to Figure 2-10 “BPM: connector and cuff holder” on page 27.
3) Connect the cuff hose connector to the machine.
4) Connect the cuff to the cuff hose.
5) Place the BPM cuff in the cuff holder.

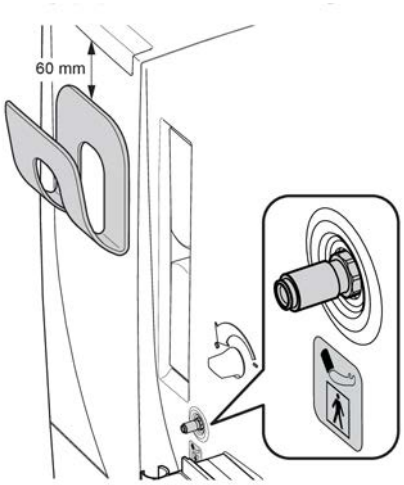

Figure 2-10. BPM: connector and cuff holder

2.2.13 Step 13 - Infusion stand

Procedure

1) Attach the infusion stand hooks to the infusion stand.
2) Install the infusion stand according to Figure 2-11 "Infusion stand" on page 27.
3) Tighten the knob.

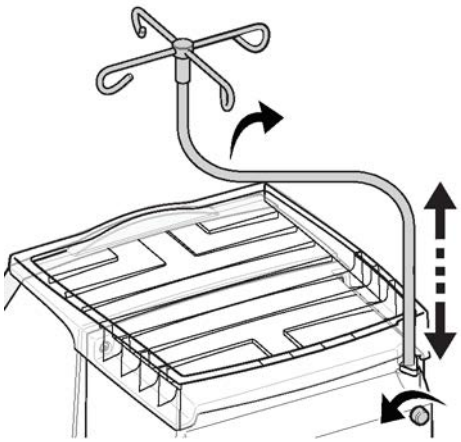

Figure 2-11. Infusion stand

NOTE!
To protect the machine against spillage, the infusion stand must always be correctly mounted in the machine.

NOTE!
You can swing the fluid bag holder between a position over the tray and to the left of the dialysis machine. A mechanical stop limits the holder movement.

2.2.14 Step 14 - Remote panel, RP 98 (option)

2.2.14.1 About RP 98

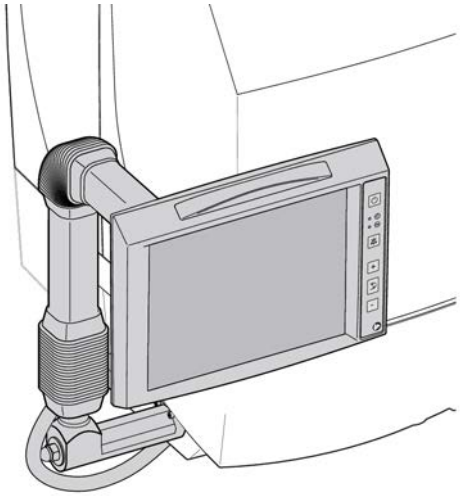

Figure 2-12. RP 98 - installation

WARNING!
If a remote Operator's Panel has been installed, fluid bags shall be removed from the infusion stand when transporting (moving) the machine to avoid overbalance. The fluid bags may be placed on the top tray.

NOTE!
The AK 98 dialysis machine is prepared for installation of the **RP 98** remote panel, either on the left or the right side of the machine.

2.2.14.2 Prepare

Procedure

1) Remove the plastic plug, 100316359, according to Figure 2-13 “Preparation” on page 29.
2) Remove the four screws, 100378406, according to Figure 2-13 “Preparation” on page 29.
3) Remove the cover according to Figure 2-13 “Preparation” on page 29.

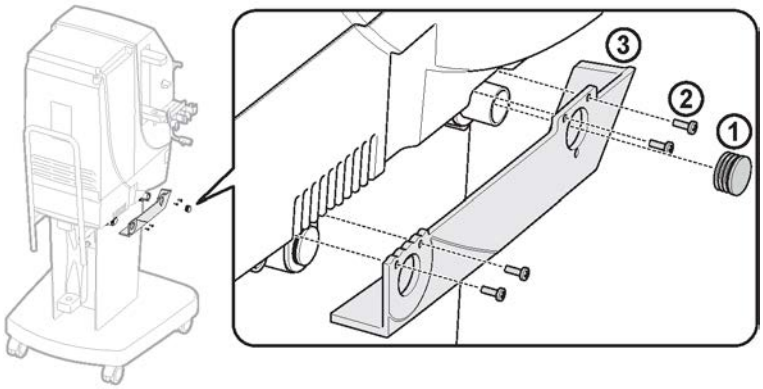

Figure 2-13. Preparation

4) Open up the cable entry in the cover with a pair of pliers according to Figure 2-14 “Cable entry” on page 29.

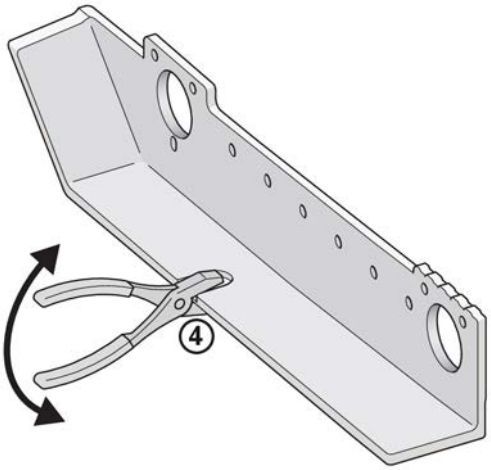

Figure 2-14. Cable entry

2.2.14.3 Installation process - RP 98

Procedure

1) Mount the fastening parts on the holder arm according to Figure 2-15 “Fastening parts” on page 30. Fasten the cap nut onto the threaded rod, but do not tighten the expander.

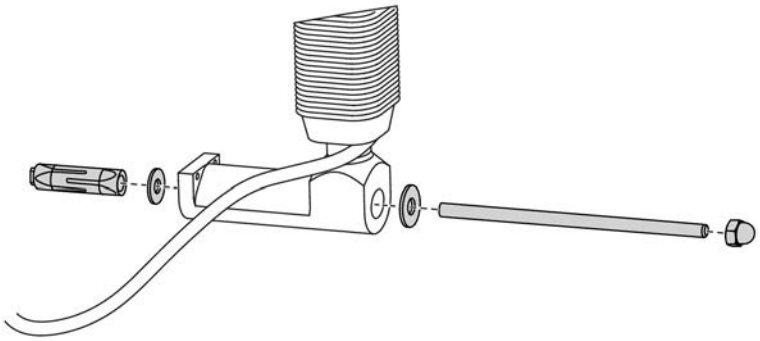

Figure 2-15. Fastening parts

2) Pull the RP 98 cable through the cable entry in the cover according to Figure 2-16 "RP 98 cable connection" on page 30.

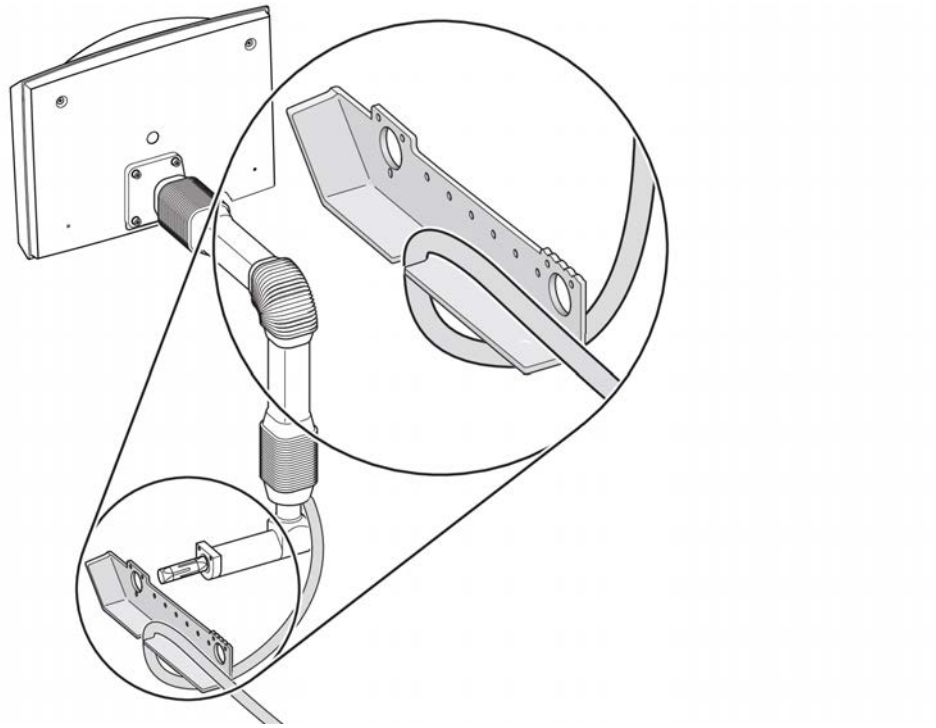

Figure 2-16. RP 98 cable connection

3) Fasten the cover (1) with two screws (2), 100378406, according to Figure 2-17 "Fasten the cover" on page 31.

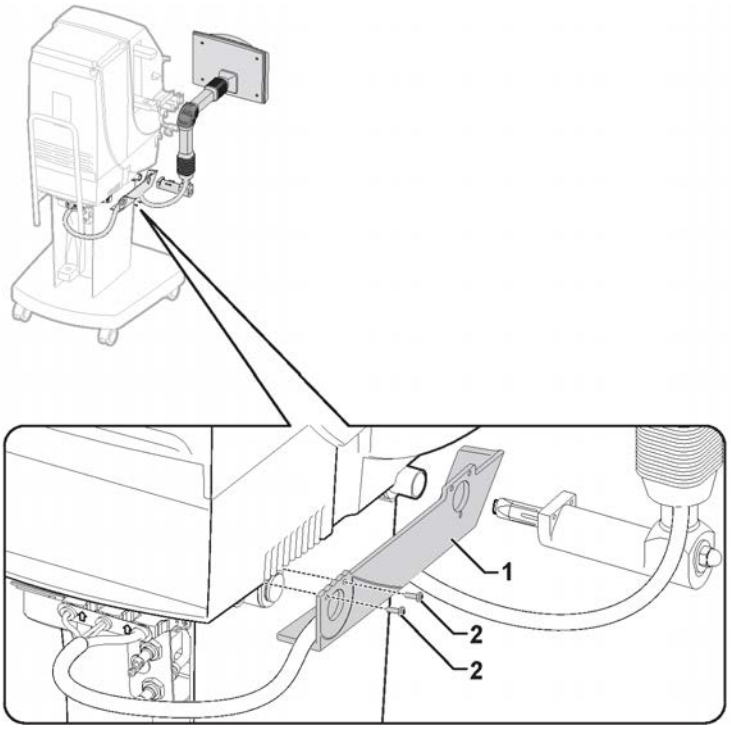

Figure 2-17. Fasten the cover

4) Fasten the plate (3) and the RP 98 arm (4) to the AK 98 dialysis machine with the attached screws, 100388425, (5) according to Figure 2-18 “Installation process - RP 98” on page 32. (Allen key).

5) Tighten the cap nut (6) according to Figure 2-18 “Installation process - RP 98” on page 32.

6) Tighten the stop screw (7) located underneath the holder arm according to Figure 2-18 “Installation process - RP 98” on page 32. (Allen key).

7) Connect the RP 98 cable (8) to the connectors (on the rear plate of the AK 98 dialysis machine) according to Figure 2-18 “Installation process - RP 98” on page 32.

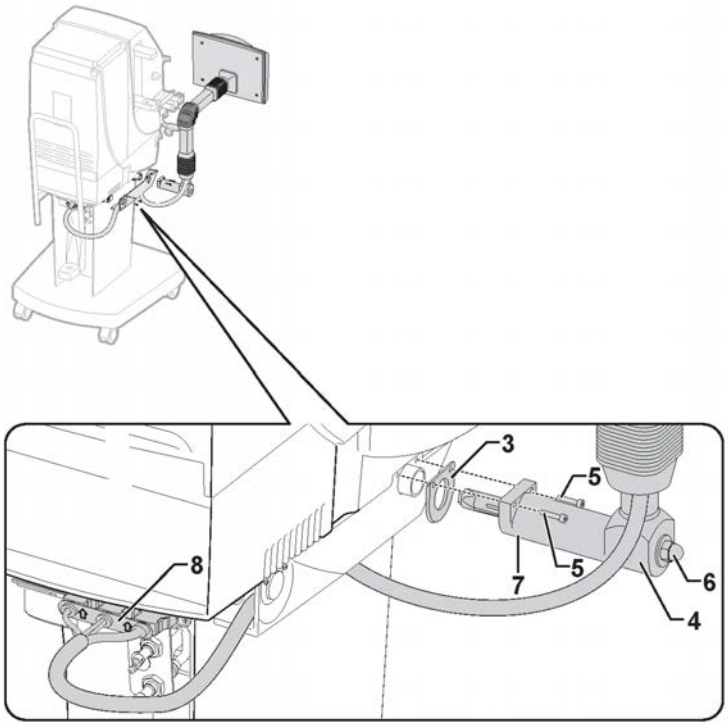

Figure 2-18. Installation process - RP 98

2.2.15 Step 15 - Water supply

Procedure

1) Connect the inlet water tube to the water inlet connector according to Figure 2-19 "Connection of the water supply" on page 32. Use hose clamp 100334015.

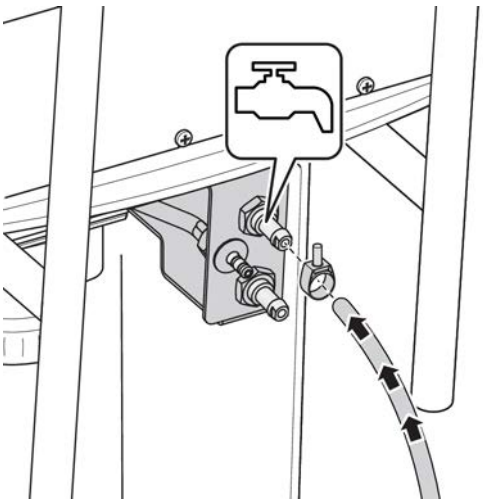

Figure 2-19. Connection of the water supply

NOTE!
Other connections may also be used for connection of the AK 98 dialysis machine to the distribution loop, e.g. PEX spiral tubes with quick connectors.

Table 2-1. Water supply

Flow rate:	During treatment: maximum 770 mL/min During disinfection and rinse/drain: a maximum flow rate of 800 mL/min is required.
Minimum inlet pressure:	0.12 MPa (1.2 bar)
Maximum inlet pressure:	0.6 MPa (6 bar)
Inlet temperature:	Treatment: +5 to +30ºC Disinfection: +5 to +90ºC
Connector in/outlet:	Diameter 8 mm
Quality:	Inlet water quality shall comply with appropriate regulations and as a minimum requirement according to ISO 13959. Level for conductivity shall not exceed 0.1 mS/cm. It is possible to use water with higher conductivity if it consists mainly of sodium salts. This may however affect the accuracy of the fluid composition. **Note!** Local regulations may require the use of separation devices in the supply and special measures to protect against the possibility of back-syphonage from dialysis equipment into the water supply.

2.2.16 Step 16 - Drain

Procedure

1) Connect the drain tube to the drain connector according to Figure 2-20 "Connection of the drain tube" on page 33. Use hose clamp 100334015.

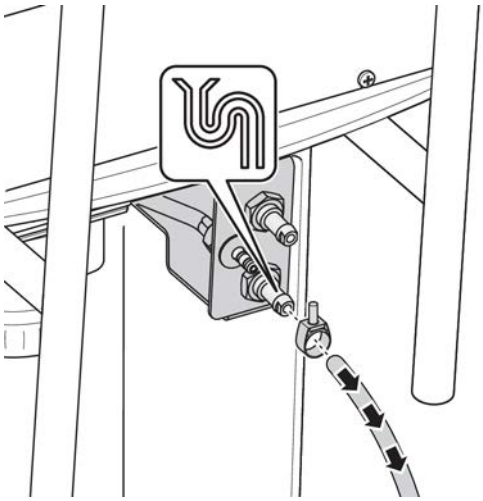

Figure 2-20. Connection of the drain tube

Results

NOTE!
The drain tube outlet shall be placed between floor level and maximum 1.2 m above the outlet connection from the fluid monitor. An air gap to atmospheric pressure shall always be arranged at the tube outlet.

NOTE!
The drain tube shall not exceed 10 metres in length.

2.2.17 Step 17 - Suction tube for chemical intake

Procedure

1) To use the disinfectant inlet, connect the suction tube according to Figure 2-21 "Suction tube for disinfectant inlet" on page 34.

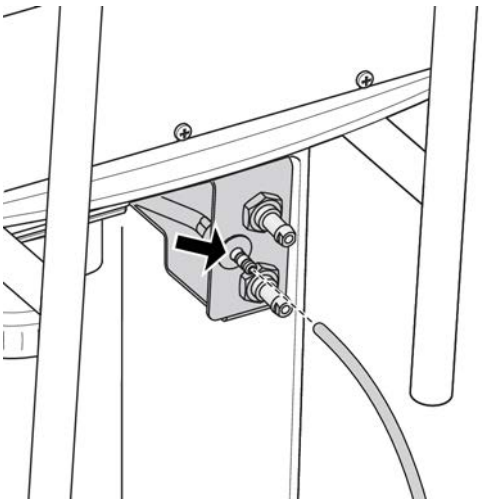

Figure 2-21. Suction tube for disinfectant inlet

2.2.18 Step 18 - Potential equalization connector

Leakage current and potential equalisation connection

Table 2-2. Definitions

Leakage current	Electrical current that leaks out of the intended circuit or current that is not functional.
Potential equalisation connection	A connection between the potential equalisation connector of the machine and the potential equalisation busbar of the electrical installation using a potential equalisation conductor. This connection shall be additional to the protective earth connection.

Treatment location

The user must make sure that the location where the AK 98 dialysis machine is installed, including the patient environment, is suitable for dialysis treatment. The location shall be maintained at a hygienic standard suitable for dialysis treatment and kept free from pets and pests.

The patient environment is the volume surrounding the patient during treatment. The size of this patient environment must be determined from case to case by the user and the authorised service technician. Any other electrical equipment used in the patient environment shall be marked with:

Any other electrical equipment not having this mark shall be located outside the patient environment. A potential equalisation connection has to be used when it is legally required.

Central venous catheter

If a central venous catheter is used during treatment with the tip of the catheter close to the heart a potential equalisation connection must be used.

Procedure

1) If a potential equalization connector is to be installed, follow local installation procedures.

   The AK 98 dialysis machine is in compliance with certain requirements concerning patient leakage current from the dialysis fluid in accordance with international standards and regulations.

NOTE!
A cable for the potential equalization socket may be ordered separately, order no. K24670001. Please contact your local **Gambro Service representative**.

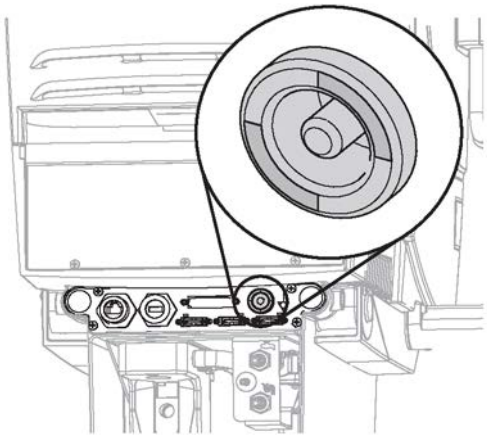

Figure 2-22. Potential equalization connector

WARNING!
To minimise the risk of arrhythmia due to leakage currents when a central venous catheter is used, and the tip of the catheter is close to the heart, it is necessary to connect the potential equalisation conductor between the AK 98 dialysis machine and the potential equalisation busbar in the electrical installation.

WARNING!
To minimise the risk of arrhythmia due to leakage currents from other electrical equipment when a central venous catheter is used, and the tip of the catheter is close to the heart, any equipment within the patient area shall have leakage current values below respective limit required by CF type applied parts.

CAUTION!
Potential equalization also has to be used when legal requirements of the installation place requires it, e.g. in Germany according to DIN VDE 0100-710 in rooms of application type 2.

2.2.19 Step 19 - Power supply

Procedure

1) Connect the mains cable to the mains connector on the AC/DC power supply according to Figure 2-23 “Power supply with fuses (1)” on page 36.

2) Secure the mains cable to the AC/DC power supply with the cable clip according to Figure 2-24 “Secure with the cable clip” on page 36.

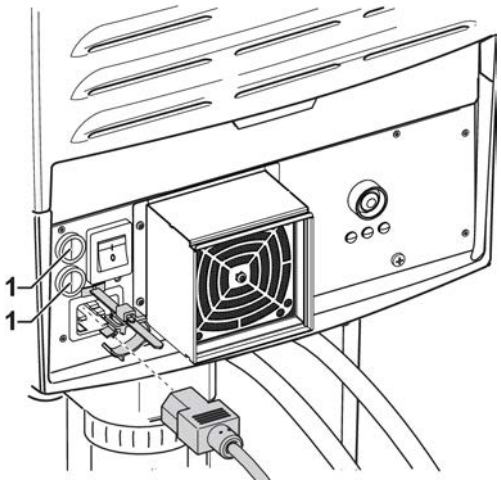

Figure 2-23. Power supply with fuses (1)

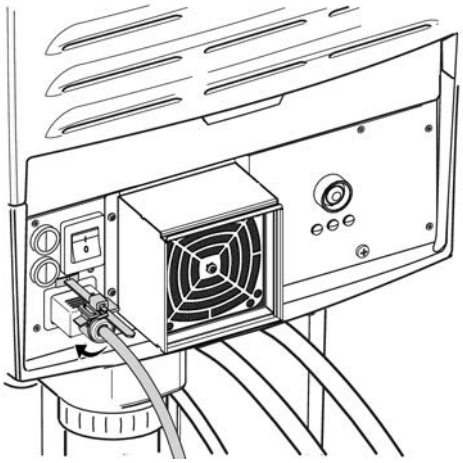

Figure 2-24. Secure with the cable clip

3) Connect the machine to a grounded power socket.

WARNING!
The mains power cable from the AK 98 dialysis machine (cable length is 3.5 metres) shall be connected to a socket with protected earth (PE) to avoid risk of electrical shock.

WARNING!
Never use multiple socket-outlet when connecting the dialysis machine or WRO 300 to mains supply since it might lead to too high leakage currents during fault conditions.

NOTE!
It is important that the protective earth in the installation is of high quality.

2.2.20 Step 19 - Power supply, instructions for home installation

WARNING!
The following tasks must be carried out by a qualified electrician:

- The electrical installation of the AK 98 dialysis machine including correct protective earth connection.
- Connection and verification that the protective earth terminal is connected to the external protective earthing system.
- Verification of the external protective earthing system.

NOTE!
The supplied mains cable (cable length is 3.5 metres) shall be permanently installed to the electrical installation via an all pole switch according to IEC 60601-1 and local regulations.

Secure the cable clip with two straps according to the figures below.

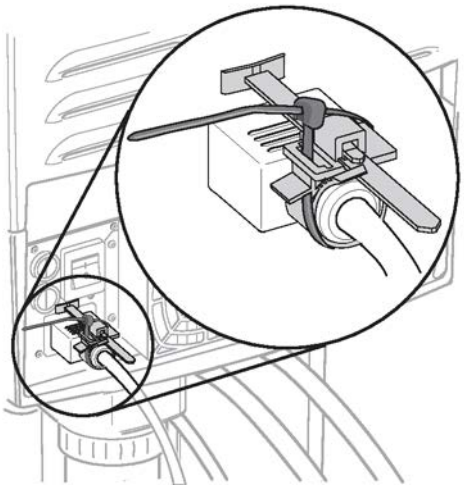

Figure 2-25. Attach the first strap

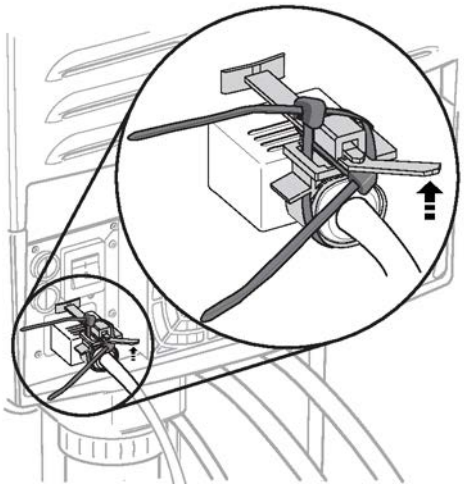

Figure 2-26. Attach the second strap and bend the plastic part upward

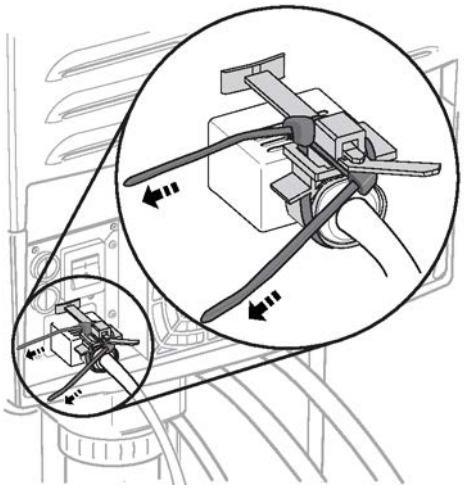

Figure 2-27. Tighten the straps

It is recommended to cut off expelled part.

2.2.21 Step 20 - Placement of warning labels

Procedure

1) Attach the “do not lean” warning labels according to Figure 2-28 “Placement of “do not lean” warning labels” on page 38.

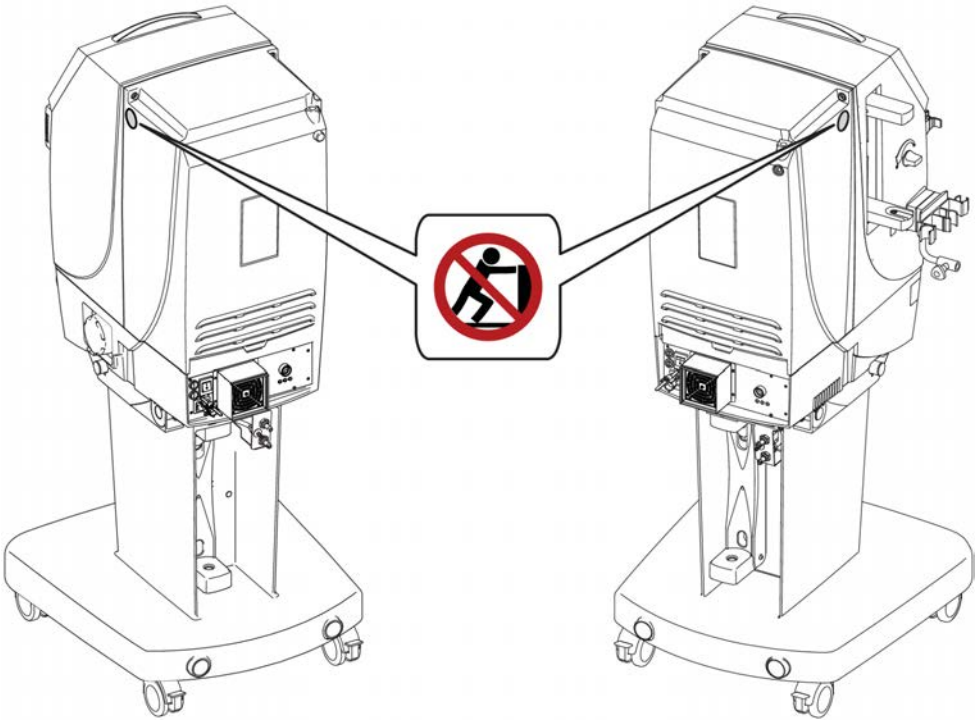

Figure 2-28. Placement of “do not lean” warning labels

2.3 Initial start-up procedure

Before you begin

- The mains cable shall be connected to a grounded power socket. Use the supplied mains cable.
- Make sure that the cable clip is properly fixed.

NOTE!
Ensure that the voltage specified on the voltage tag matches the mains voltage. If in doubt, please contact your local **Gambro Service representative**.

- The main switch on the rear of the monitor is turned on.
- The machine is connected to the water supply.
- The drain tube is properly connected to the machine and placed with an air gap between the drain tube and the drain.
- The red and blue dialysis fluid tubes are connected to the safety couplings.
- The ultrafilter (option) is installed.

Procedure

1) Press the **On/Off** button.
2) Preset the machine according to the local clinic requirement.

   See section "Preset mode" in chapter 5 in the AK 98 service manual.
3) To verify full functionality - let the AK 98 dialysis machine pass the functional check.

NOTE!
Each time the AK 98 dialysis machine is started, an automatic functional check is carried out.

The functional check requires that the dialysis fluid tubes are connected to the safety couplings. The dialysis fluid tubes shall remain connected to the safety couplings until “functional check” has disappeared from the time indicator.

(If UFD is installed, the dialysis fluid tubes shall remain connected to the safety couplings until the bypass path of the flow diagram lights up green.)

The functional check will be aborted if Rinse/Drain or any of the disinfection modes are selected.

The machine performs either an extended functional check or a shorter basic functional check. An authorised service technician can preset the machine to perform a basic functional instead of an extended functional check between treatments. See chapter 12 "Functional check" in the AK 98 service manual for more information.

"Functional check" in this manual refers to either basic functional check or extended functional check. When a specific functional check is described "extended functional check" or "basic functional check" will be used.

4) Perform a heat disinfection (or a chemical disinfection) according to the AK 98 operator’s manual.

CAUTION!
If a chemical disinfection procedure is performed, a residual test shall be performed prior to connecting a patient.

5) After heat disinfection, re-tighten the nuts of the dialyzer connector set to the machine.

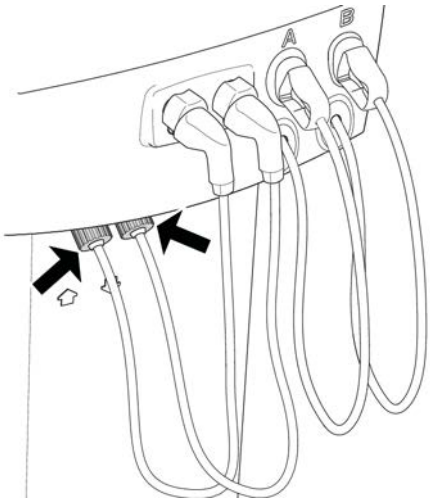

6) It is recommended to perform a simulated treatment according to instructions in section "Actions to carry out after the parts in the Base-kit have been exchanged" in chapter 8 in the AK 98 service manual.

WARNING!
After completing the installation process, the composition of the dialysis fluid shall be confirmed in laboratory tests before the AK 98 dialysis machine is ready for use.

2.4 Presets for Chemical Disinfection with WRO unit

Table 2-3. Presets to install in AK 98 dialysis machine for Chemical Disinfection program with WRO unit (WRO 300 H or WRO 300)

Required presets to install	Name	Comment
6–0–0–1	Chemical disinfection ALT 1: Central chemical. Set to Yes.	N/A
6–0–0–7	Chemical disinfection ALT 1: Overnight disinfection allowed. Set to Yes.	N/A
Preset to install for serial communication		
1–17	WRO 300 H Installed. Set to installed	Interface cable is needed for serial communication
Preset to install if supervision of the disinfectant conductivity is desired for AK 98 dialysis machine		
6–0–0–6	Chemical disinfection ALT 1: Conductivity check limits (min. = 0.0, max. = 50.0), mS/cm	N/A

NOTE!
WRO unit (WRO 300 H or WRO 300) must be preset to work correctly with the AK 98 dialysis machine.

2.5 Requirements and presets for performing integrated heat disinfection

2.5.1 Requirements

Power consumption:	For 230 V, the AK 98 dialysis machine and the WRO 300 H unit can be connected to the same 10 A fuse as the heaters are not energized simultaneously.
AK 98 dialysis machine:	All hardware and software versions are supported.
WRO 300 H:	Program version 4.1 or higher.
Interface cable:	K23718001 (1.0 m), K23718002 (2.9 m) or K24813001 (10 m).

2.5.2 Presets

Presets in the AK 98 dialysis machine:

- 1-17 (WRO 300 H Installed)
- 6-1-5-0 (Auto disinfection of WRO 300 H) = With WRO 300 H, default.
- 6-1-5-4 (Low flow heat time) = 00:15, default.

Presets in the WRO 300 H unit:

- S182 (WRO 300 - AK protocol) = 1, serial communication
- S183 (Automatic HEAT starts after remote LFH). Heat disinfection of WRO 300 H will follow automatically after the LFH phase if S183 is set to TRUE.

2.6 Requirements and presets for performing central chemical disinfection

2.6.1 Required presets in WRO 300 /WRO 300 H

- Set the appropriate disinfection protocol (S67, S77 or S87) to visible.
- A communication cable shall be used (see below), set S182 (WRO 300 – AK protocol) to parallel or serial, depending on type of communication cable.

2.6.2 Required presets

Required presets in the AK 98 dialysis machine:

6-0-0-1	Chemical disinfection ALT 1: Central chemical	Set to Yes
6-0-0-7	Chemical disinfection ALT 1: Overnight disinfection allowed.	Set to Yes

2.6.3 WRO 300 H communication

Communication between the AK 98 dialysis machine and WRO 300 H:

1-17 WRO 300 H Installed	Set to not installed (Needed for both WRO 300 and WRO 300 H)

2.6.4 Supervision of the disinfectant conductivity

If supervision of the disinfectant conductivity is desired for the AK 98 dialysis machine:

6-0-0-6	Chemical disinfection ALT 1: Conductivity check limits (min. = 0.0, max. = 50.0), mS/cm

2.6.5 Communication cables

Communication cables for the AK 98 dialysis machine:

Parallel communication (only remote start/stop, yellow): K21186003 (2.9 m) Serial communication (also for integrated heat, green): K23718002 (2.9 m) or K24813001 (10 m).

For more information, see HCEN12482 and HCEN12479.

2.7 Service reporting - dialysis machine installation

When installing a new monitor, ensure proper reporting in Gambro's global electronic service reporting system.

This is important information, and it will assist Gambro to improve the product.

2.8 Installation checklist

Table 2-4. Machine

Machine identification	
Product code	
Serial number	

Table 2-5. Checklist

Description	Performed
Step 1 - Unpacking the machine: no shipping damage	□
Step 2 - Inspection of delivered equipment	□
Step 3 - Remove the machine from the pallet	□
Step 4 - Additional package box	□
Step 5 - Dialyzer connector set, red	□
Step 6 - Dialyzer connector set, blue	□
Step 7 - Transportation handle	□
Step 8 - Pick-up tube holder	□
Step 9 - Ultrafilter (option)	□
Step 10 - Dialyzer holder	□
Step 11 - Top tray	□
Step 12 - BPM: cuff holder and cuff (option)	□
Step 13 - Infusion stand	□
Step 14 - Remote panel, RP 98 (option)	□
Step 15 - Water supply	□
Step 16 - Drain	□
Step 17 - Suction tube for chemical intake	□
Step 18 - Potential equalization connector	□
Step 19 - Power supply	□
Step 19 - Power supply, instructions for home installation	□
Step 20 - Placement of warning labels	□
Initial start-up procedure	□
Service reporting - installation	□

Table 2-6. Performed by

Date	Signature

This record is to be signed and filed by the Service Engineer responsible for the initial installation and start-up procedure of this AK 98 dialysis machine.

This page is intentionally left blank.

3 Technical description

3.1 Introduction

3.1.1 General information

The AK 98 dialysis machine is designed to be used as a single patient machine to perform haemodialysis treatments upon prescription by a physician. Patient counselling and teaching of treatment techniques are directly under the supervision and discretion of the physician.

The AK 98 dialysis machine can be divided into the following parts:

- Fluid unit
- Blood unit
- Power supply
- Operator's panel

3.1.2 Fluid unit

The fluid unit is used to produce the dialysis fluid (with the correct temperature, flow, and composition) from reverse osmosis water and concentrates, and to transport the dialysis fluid through the dialyzer.

The fluid unit maintains the dialysis fluid flow through the dialyzer by controlled ultrafiltration. If a fault occurs, the fluid unit bypasses the dialyzer.

The AK 98 fluid unit includes the following main functions:

- Inlet pressure control and monitoring
- Temperature control and monitoring
- Concentrate/disinfectant intake
- Conductivity control and monitoring
- Degassing pressure and flow regulation
- High pressure monitoring
- UF control, measuring, and UF supervision
- TMP monitoring
- Clearance measurement (option)
- Blood leak detection

3.1.3 Blood unit

The blood unit is designed to control and supervise the extracorporeal blood circuit. Single needle treatment can be performed with one pump (double clamp function). To prevent coagulation, anticoagulants may be administered by means of the Heparin pump.

Disposable blood lines are used for the blood flow. The blood unit includes the following main functions:

- Arterial and venous line clamps control
- Arterial blood pressure monitoring
- Venous blood pressure monitoring
- Blood flow control
- Administration of anticoagulants (e.g., Heparin)
- Air detection
- Priming detection

3.1.4 Power supply

The mains voltage is fed to an AC/DC converter which generates different DC supplies for the monitor.

3.1.5 Operator's panel

Both the blood unit and the fluid unit are controlled from the operator's panel. The panel contains a screen and a number of buttons to the right of the screen. The screen allows the operator to interact with the dialysis machine by pressing various buttons. The buttons are language-independent. The information in the display can be set to different languages.

Detailed information about the functionality of the operator's panel is available in the AK 98 operator's manual.

This page is intentionally left blank.

3.2 Product description

3.2.1 Blood unit - exterior parts

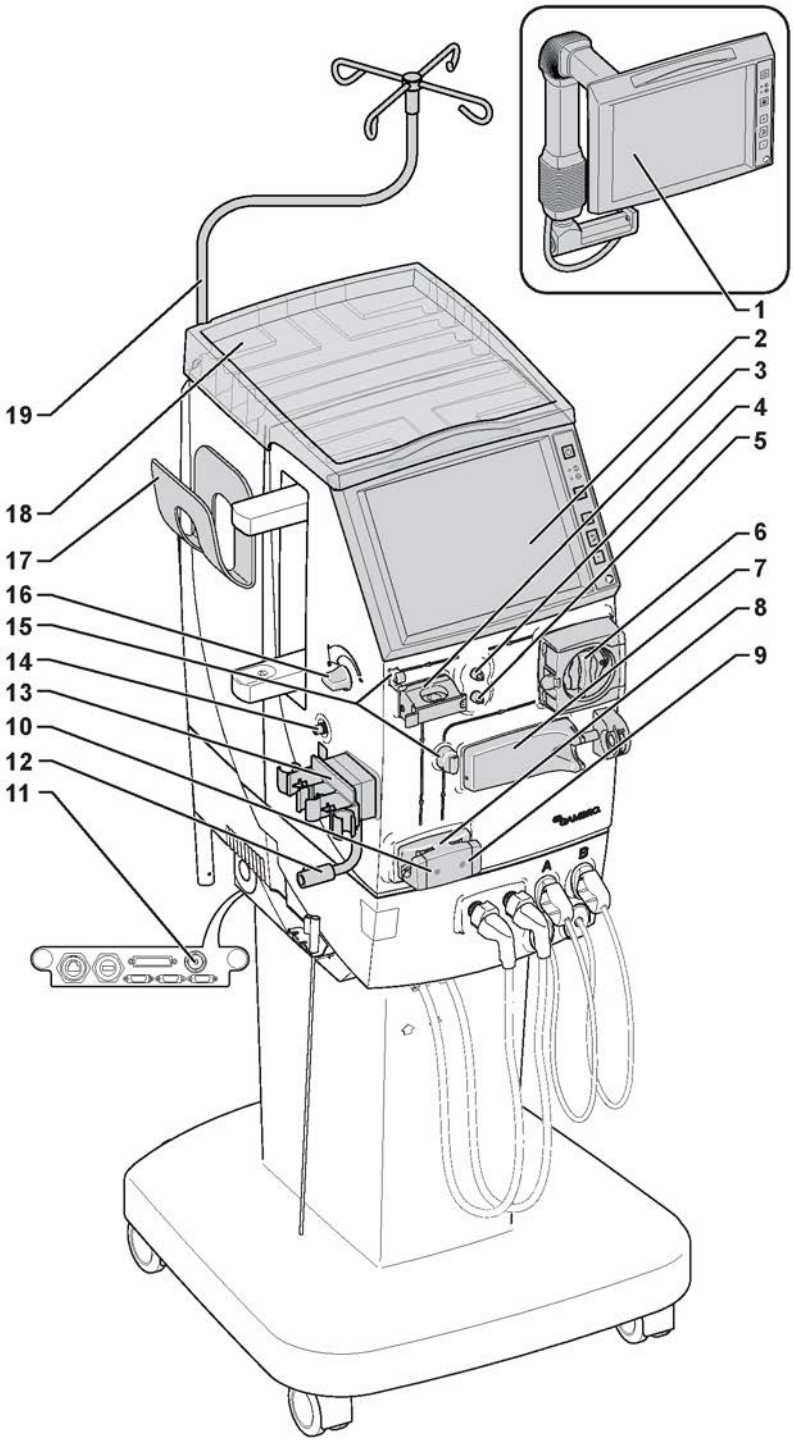

Figure 3-1. Blood unit - exterior parts

1. Remote operator's panel (option)
2. Operator's panel
3. Air detector
4. Venous pressure transducer connector
5. Arterial pressure transducer connector
6. Blood pump
7. Heparin pump
8. Priming detector
9. Arterial blood line clamp
10. Venous blood line clamp
11. Potential equalization connection
12. Arm for dialyzer holder
13. Expansion chamber holder
14. Blood pressure monitor (BPM) connector (option)
15. Blood line guides
16. Level adjustment knob
17. BPM cuff holder (option)
18. Top tray
19. Infusion stand

3.2.2 Blood unit - interior parts

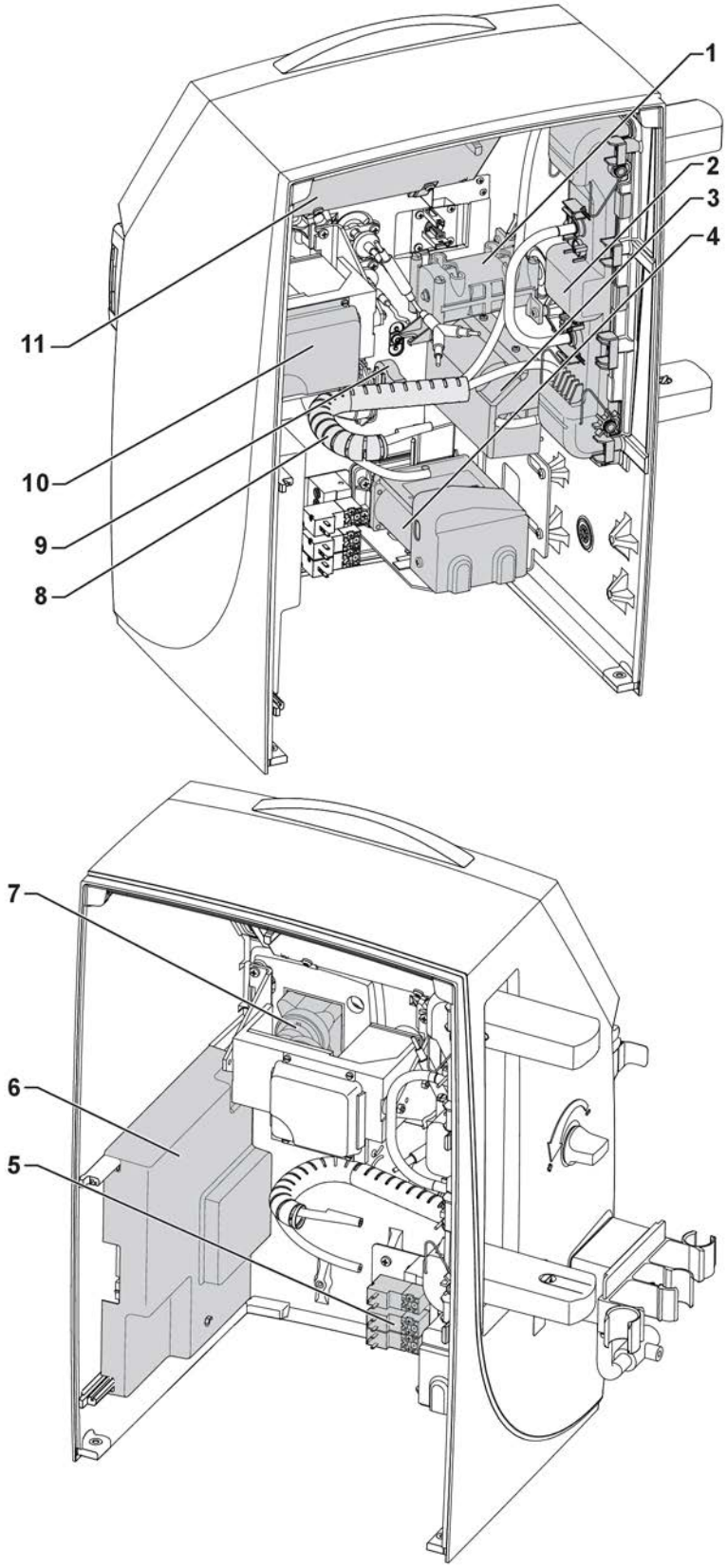

Figure 3-2. Blood unit - interior parts

1. Level regulation
2. BiCart cartridge holder (part of the Fluid unit flow path)
3. BPM (blood pressure module), option
4. Clamp unit
5. BPTT (blood pressure transducer test)
6. Front I/O board
7. Blood pump bearing
8. Tubings to/from BiCart cartridge holder
9. Heparin pump
10. Blood pump
11. Operator's panel

3.2.3 Fluid unit - exterior front parts

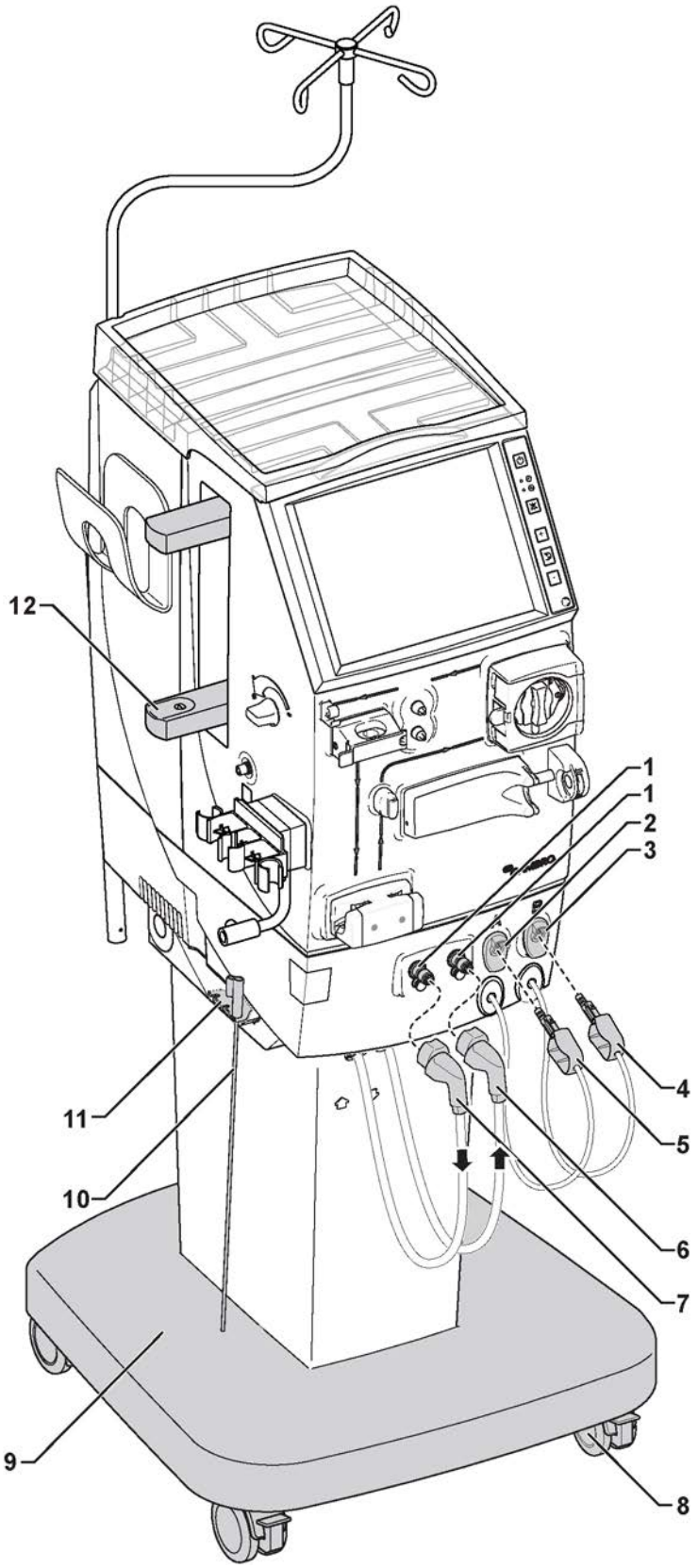

Figure 3-3. Fluid unit - exterior front parts

1. Safety couplings for the dialysis fluid tubes
2. Stand-by port for red concentrate connector
3. Stand-by port for blue concentrate connector
4. Blue: concentrate connector with white tube marking
5. Red: concentrate connector
6. Machine outlet dialysis fluid tube from the machine to the dialyzer (blue)
7. Machine inlet dialysis fluid tube to the machine from the dialyzer (red)
8. Lockable wheels
9. Foot unit
10. Concentrate pick-up tube
11. Pick-up tube holder
12. BiCart cartridge holder

3.2.4 Fluid unit - exterior rear parts

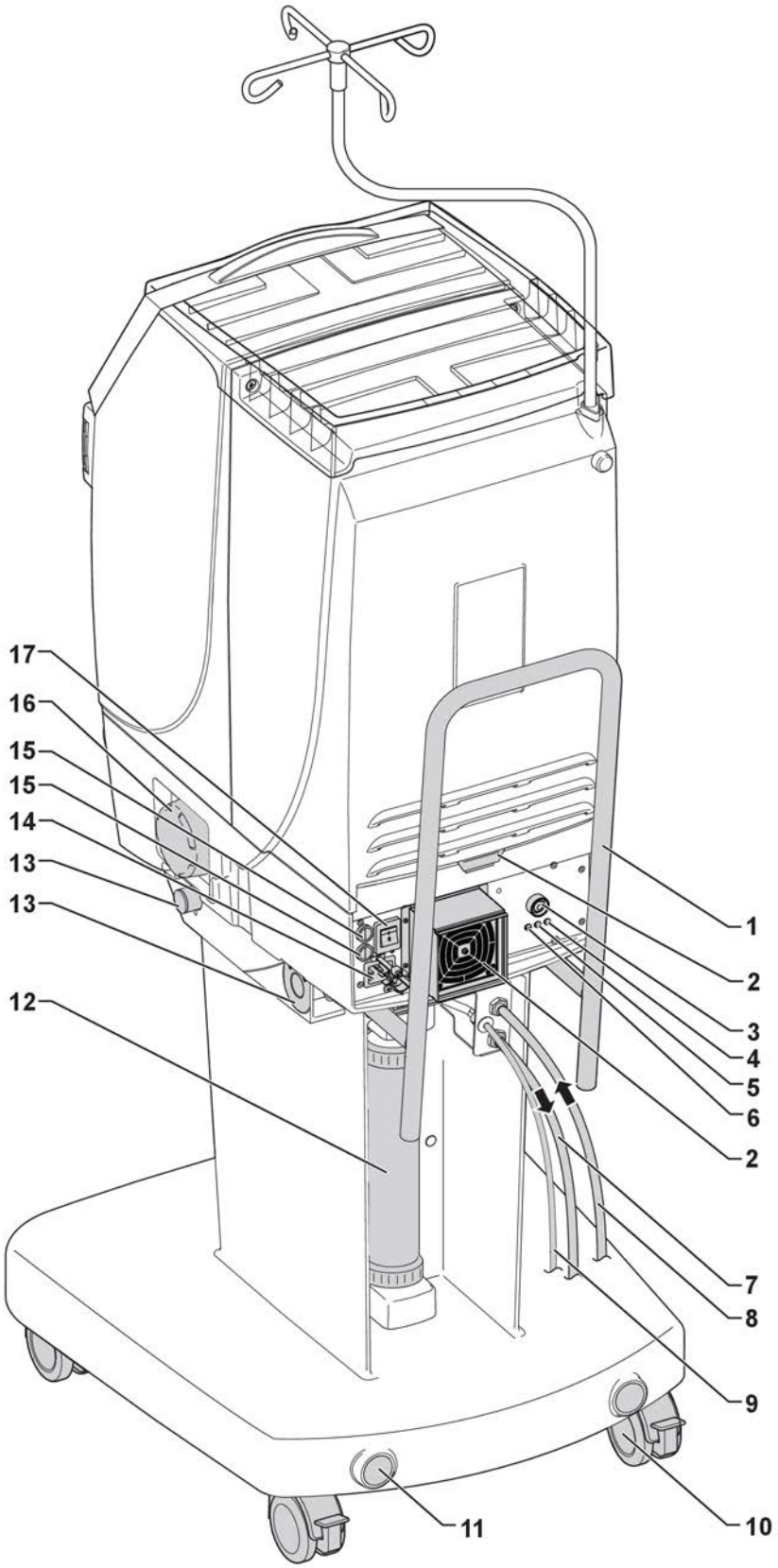

Figure 3-4. Fluid unit - exterior rear parts

1. Transportation handle
2. Air filters
3. Halt button
4. Battery charge indicator
5. Battery connect indicator
6. Over temperature protection
7. Outlet tube (Drain)
8. Inlet water tube
9. Disinfectant inlet tube
10. Lockable wheels
11. Attachment for WRO 300
12. Ultrafilter (option)
13. Attachment for service table
14. Mains connection
15. Fuses (230 V AC 10AT, 115 V AC 15AT)
16. Blood leak detector
17. Main switch

3.2.5 Fluid unit - interior parts 1

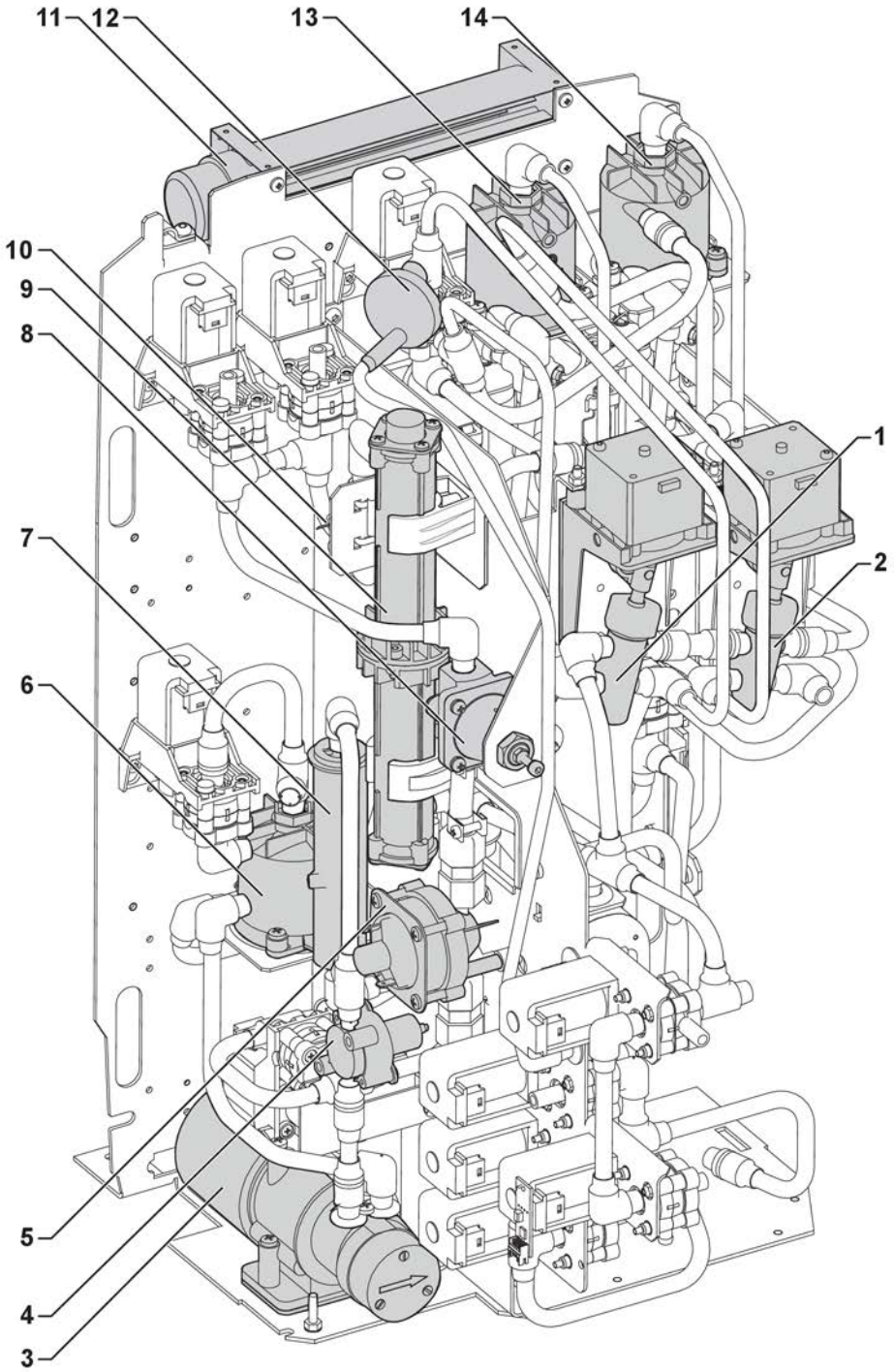

Figure 3-5. Fluid unit - interior parts 1

1. Feeding pump B
2. Feeding pump A
3. Flow pump
4. Pressure transducer, degassing pressure
5. Pressostate, INPS
6. Degassing chamber
7. Expansion chamber
8. Pressure regulator, PR2
9. Heater
10. Flow switch
11. Fan
12. Concentrate filter
13. Mixing chamber A
14. Mixing chamber B

3.2.6 Fluid unit - interior parts 2

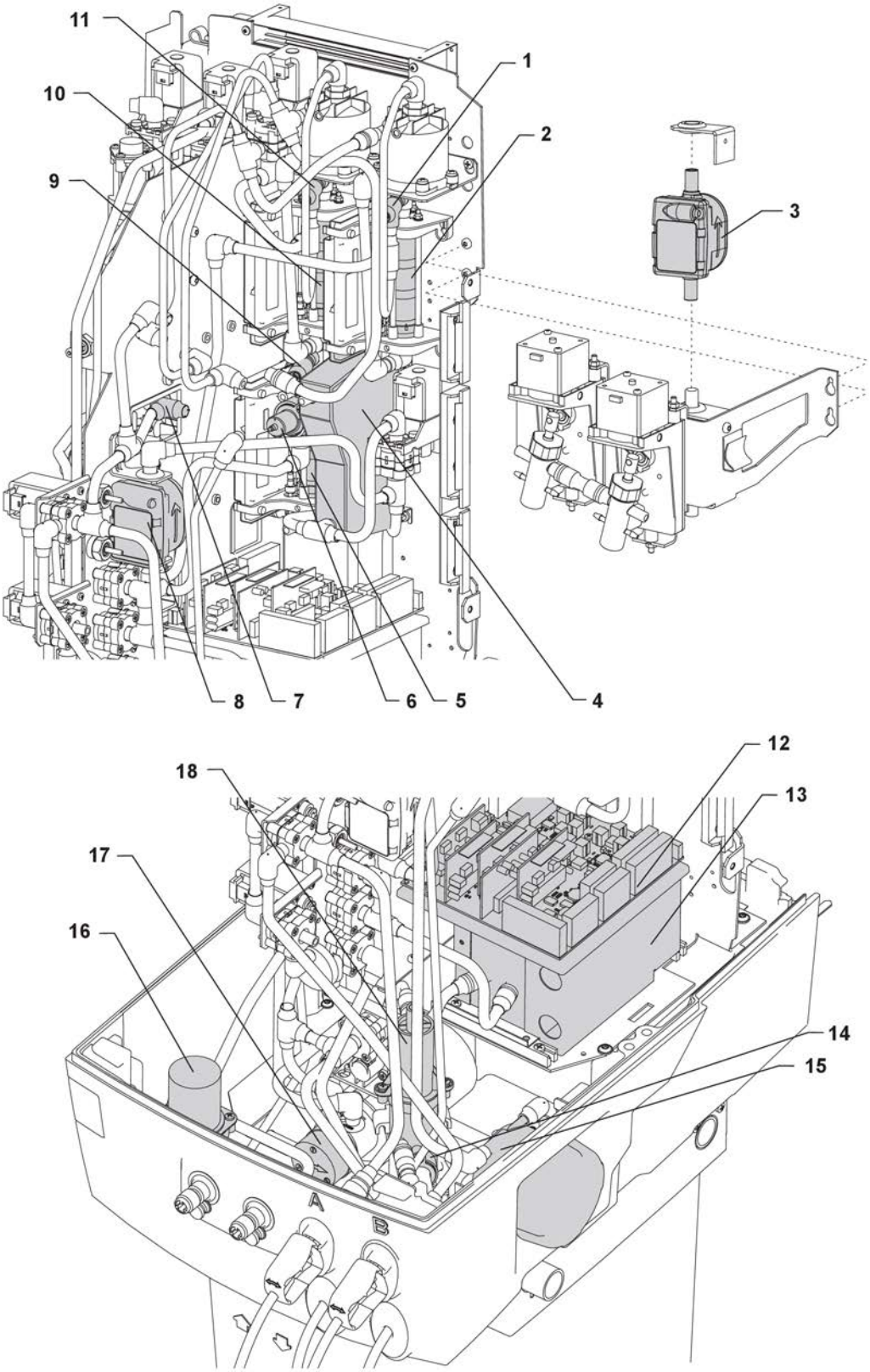

Figure 3-6. Fluid unit - interior parts 2

1. Temperature transducer, Cond. cell B
2. Conductivity cell B
3. UFS channel 2
4. Conductivity cell C (Diascan®), option
5. Conductivity cell P
6. Pressure transducer, HPG (high pressure guard)
7. Temperature transducer, Heater (outlet)
8. UFS channel 1
9. Temperature transducer, Cond. cell P
10. Conductivity cell A
11. Temperature transducer, Cond. cell A
12. General I/O board
13. UF-measuring cell
14. Pressure transducer, PD
15. Blood leak detector
16. Pressostate, SAGS
17. Suction pump
18. Deaerating chamber

3.2.7 Fluid unit - interior parts 3

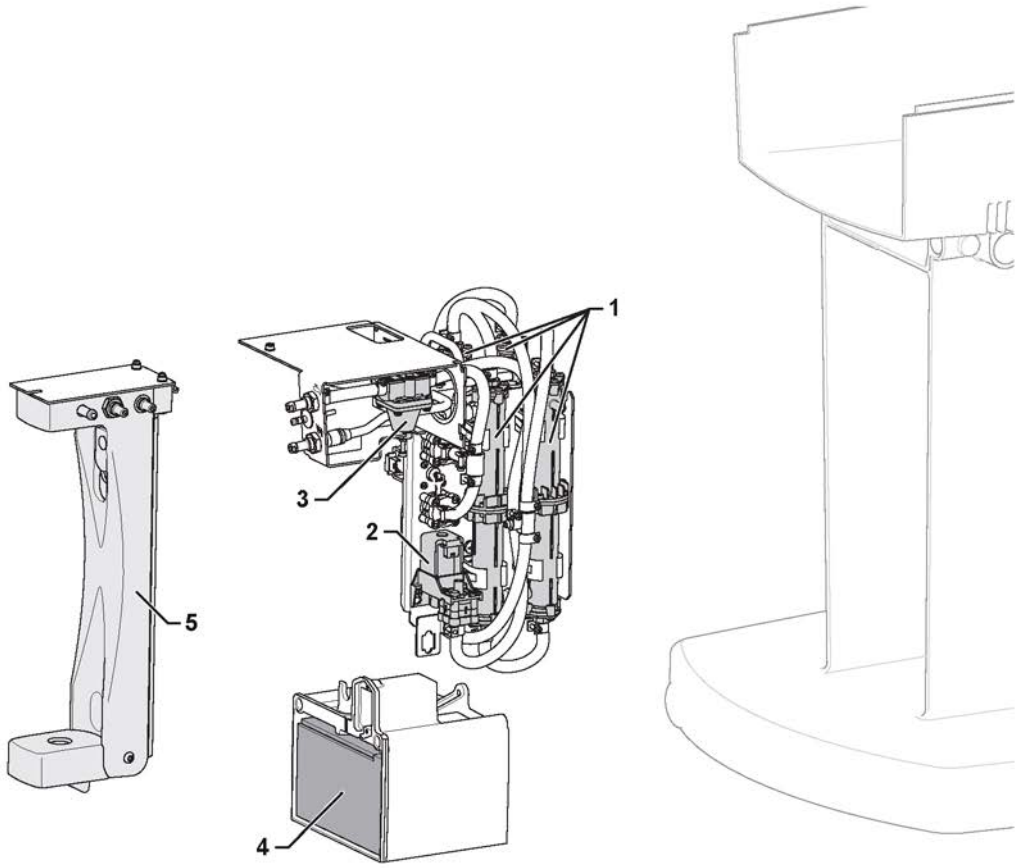

Figure 3-7. Fluid unit - interior parts 3

1. Heat exchangers
2. FIVA (option for Ultrafilter)
3. Pressure regulator, PR 1
4. Back-up battery
5. Ultrafilter holder (option)

3.2.8 Fluid unit - valves

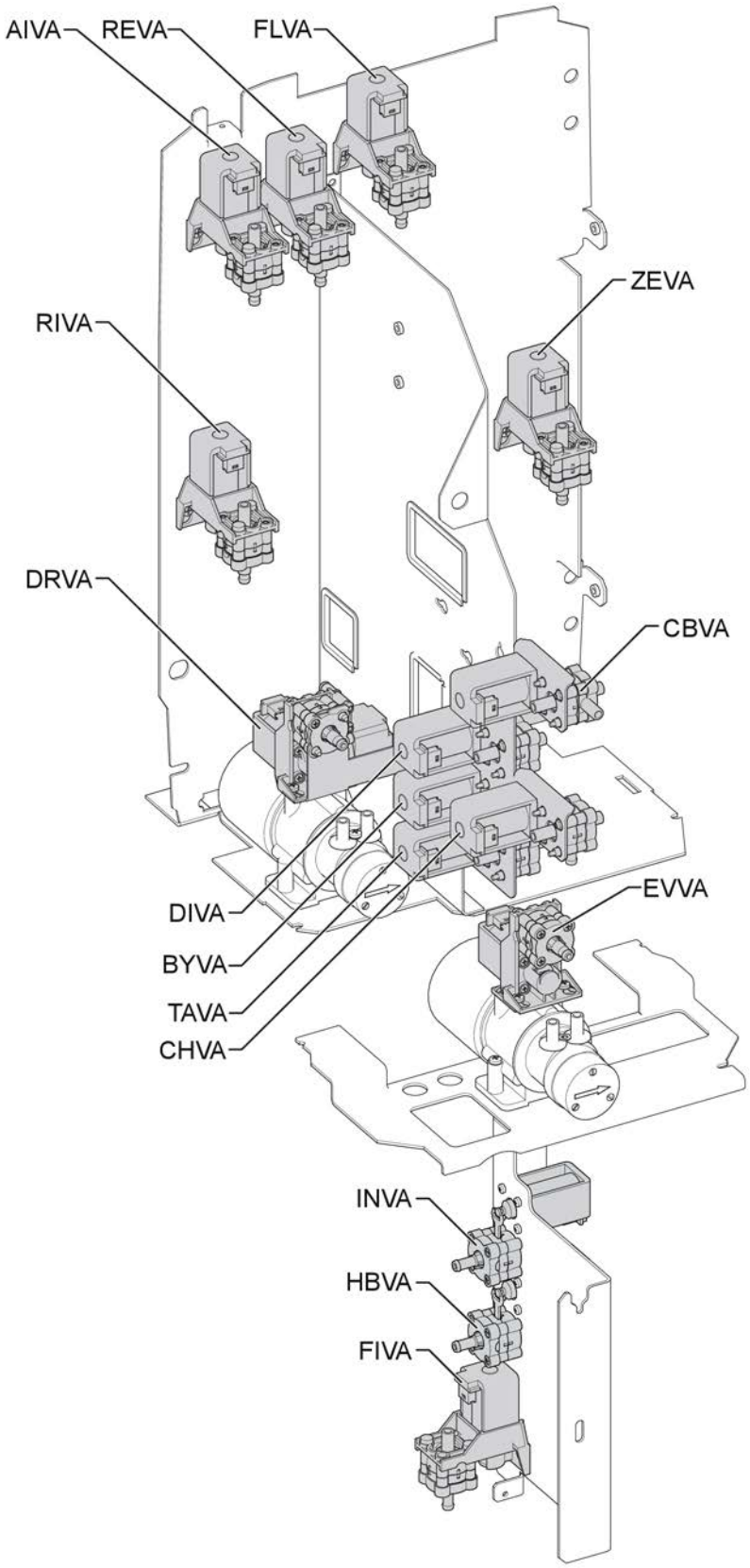

Figure 3-8. Fluid unit - valves

Table 3-1. Valve description

AIVA	Air inlet valve
BYVA	Bypass valve
CBVA	Chemical bypass valve
CHVA	Chemical valve
DIVA	Direct valve
DRVA	Degass restrictor valve
EVVA	Evacuation valve
FIVA	Filter valve - (option for UFD)
FLVA	Flush (BCH) valve
INVA	Inlet valve
HBVA	Heat exchanger bypass valve
REVA	Recirculation valve
RIVA	Rinse valve
TAVA	Taration (UF) valve
ZEVA	Zero (UF) valve

3.3 Fluid unit description

3.3.1 Subsystems

The AK 98 fluid unit can be divided into the following main subsystems:

- The water intake and heating system
- Chemical disinfectants intake
- Mixing and conductivity control system
- Degassing/flow pump system
- Fluid output - UF control system

The description of the AK 98 fluid unit is based on the fluid unit flow path on the next page.

3.3.2 Fluid unit - flow path

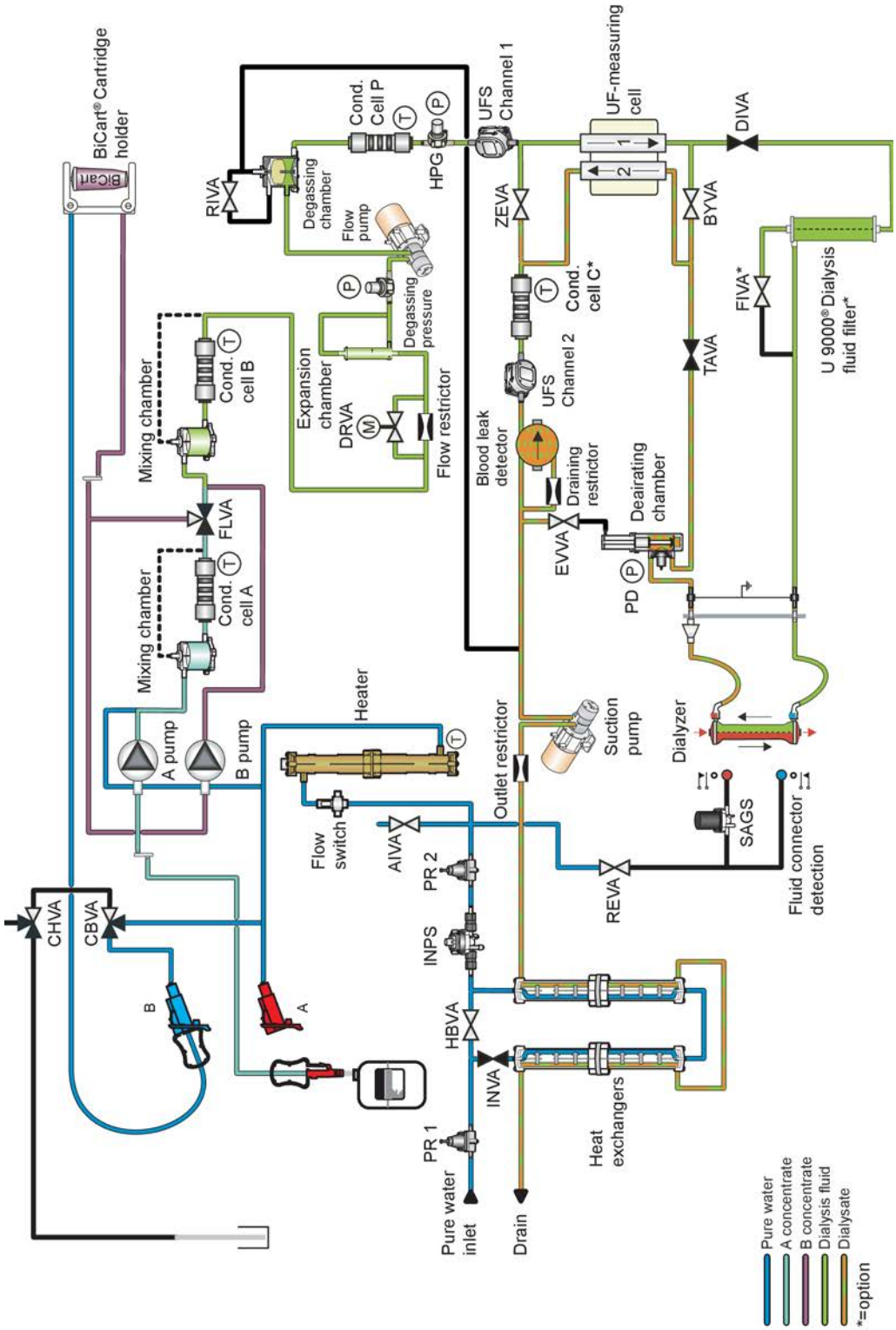

Figure 3-9. See chapter 11: "Fluid unit - flow path"

3.3.3 Fluid unit – flow path description

3.3.3.1 The water intake and heating system

Before entering the machine, the water passes a pressure regulator (PR1), which lowers the water supply pressure to 0.8 Bar (600 mmHg). The heat exchanger bypass valve (HBVA) is closed at this time.

A heat exchanger using the outgoing water raises the incoming water temperature several degrees to ensure that machines at clinics with very cold water can still reach the correct heat disinfection temperature.

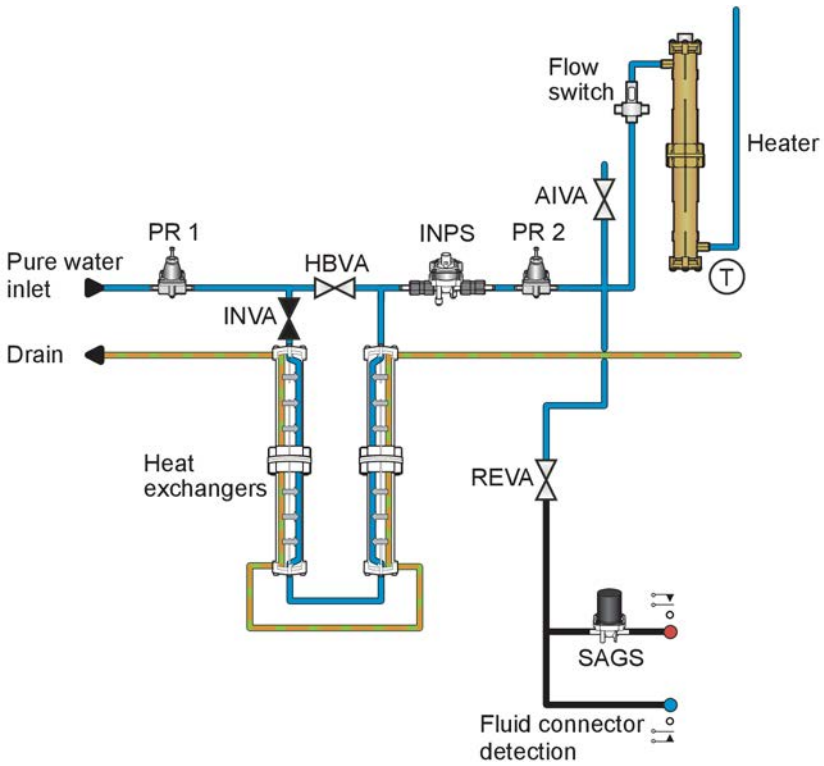

Figure 3-10. See chapter 11: "Fluid unit - flow path".

In the machine, the water passes a second pressure regulator which lowers the pressure to about +130 mmHg – and INVA – Inlet Valve. The inlet pressure is monitored with a pressostate – INPS – which alarms if pressure drops below 99 ± 20 mmHg and the alarm is disabled when the pressure reaches above 150 ± 20 mmHg again.

AIVA – Air Inlet Valve – facilitates draining of the fluid system (it opens during drain phase). REVA – Recirculation Valve – is used during disinfection and rinsing (water is circulating).

HBVA – Heat exchanger Bypass Valve is used to help cool down the AK 98 dialysis machine faster after a heat disinfection program.

Water is heated as it passes through the heating element in the heater. The flow switch in the inlet is used for overheat protection (no flow = heater off). The transducer “Regulator Temperature” at the heater’s outlet is one of the two transducers used for temperature control – the other is placed in conductivity cell B.

The heating element is controlled through a solid state relay, which is driven by a TTL-level duty cycle signal (which can be monitored as a value from 0 to 100%).

3.3.3.2 The Temperature Control and Protective System

3.3.3.2.1 Description

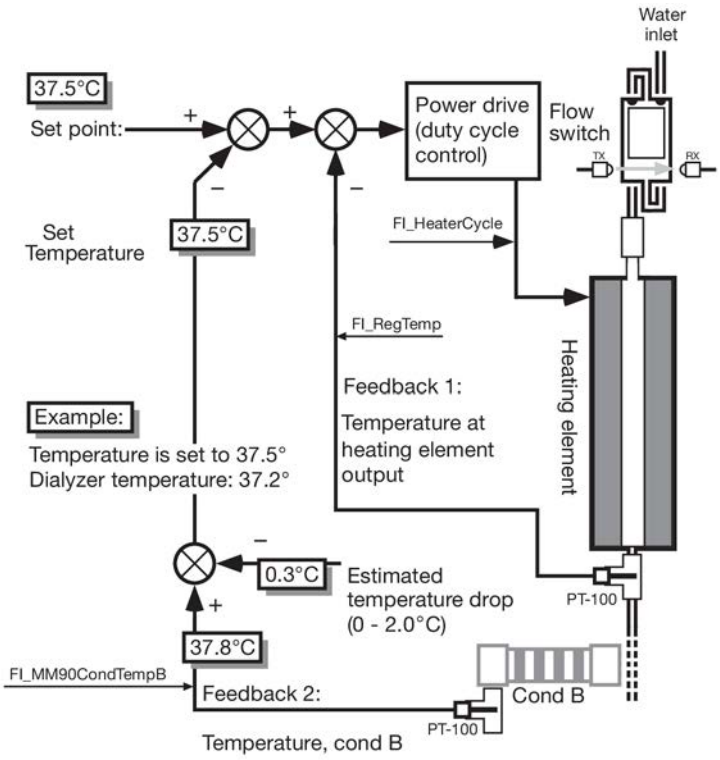

Figure 3-11. Temperature control loop

The temperature of the dialysis fluid is controlled by two temperature transducers, one immediately after the heating element and one in conductivity cell B.

The temperature drop from conductivity cell B to the dialyzer should be estimated by measuring the (stabilized) temperature in the fluid tubes with a Gambro reference instrument and comparing it to the conductivity cell B temperature reading in GXL. The default value for the estimated temperature drop is 0.2ºC. The calibration of the machine shall take place in the same environmental setting as treatment will take place with the preferred dialysis fluid flow.

When the value has been changed, measure the temperature at the dialyzer with a reference instrument.

Calibration procedure:

1. Start the AK 98 dialysis machine.
2. Enter `Preset` mode, see Section 5.1.3 “Enter service or preset mode” on page 123.
3. Press `Set values and limits`.
4. Press `Estimated temperature drop`.
5. Set `Estimated temp drop:` to 00.0 ºC and press `Ok`.
6. Exit `Preset` mode.
7. Restart the machine and let it pass functional check.
8. Connect a computer with GXL and start logging mode Fluid Monitor.
9. Connect the dialyzer connectors to the Gambro reference instrument.
10. Press the `Fluid bypass` button.
11. Mount a venous drip chamber filled with water.

12. Enter `CONNECT PATIENT` and start the blood pump.
13. When desired fluid flow is obtained, stop the blood pump.
14. Leave the machine in green fluid path and wait for the temperature to stabilize, at least 20 minutes.
15. Subtract the reference instrument temperature reading from the conductivity cell B temperature reading in GXL and note the result.
16. Enter `Preset` mode, see Section 5.1.3 “Enter service or preset mode” on page 123.
17. Press `Set values and limits`.
18. Press `Estimated temperature drop`.
19. Set `Estimated temperature drop` according to the result of your calculation (conductivity cell B temperature − reference instrument temperature) and press `Ok`.
20. Exit `Preset` mode.
21. Disconnect the reference instrument.

Temperature control is handled by two feedback loops. The feedback from the heating element outlet – where temperature changes are large and fast – goes to a fast-reacting loop. The temperature transducers in the conductivity cell B – where temperature changes are small and slow – goes to a slow-reacting loop.

The temperature transducers in the conductivity cell A and in the conductivity cell P are used for compensation of the conductivity measurements only – not for temperature control. Conductivity cell P is also used for Protective supervision.

Overheat protection is achieved by monitoring the flow into the element with a flow switch: If the flow stops, power to the heater element is cut off.

The heater element is driven by an OPTO relay in series with the Mechanical relay, which is controlled by both the Control System and the Protective System.

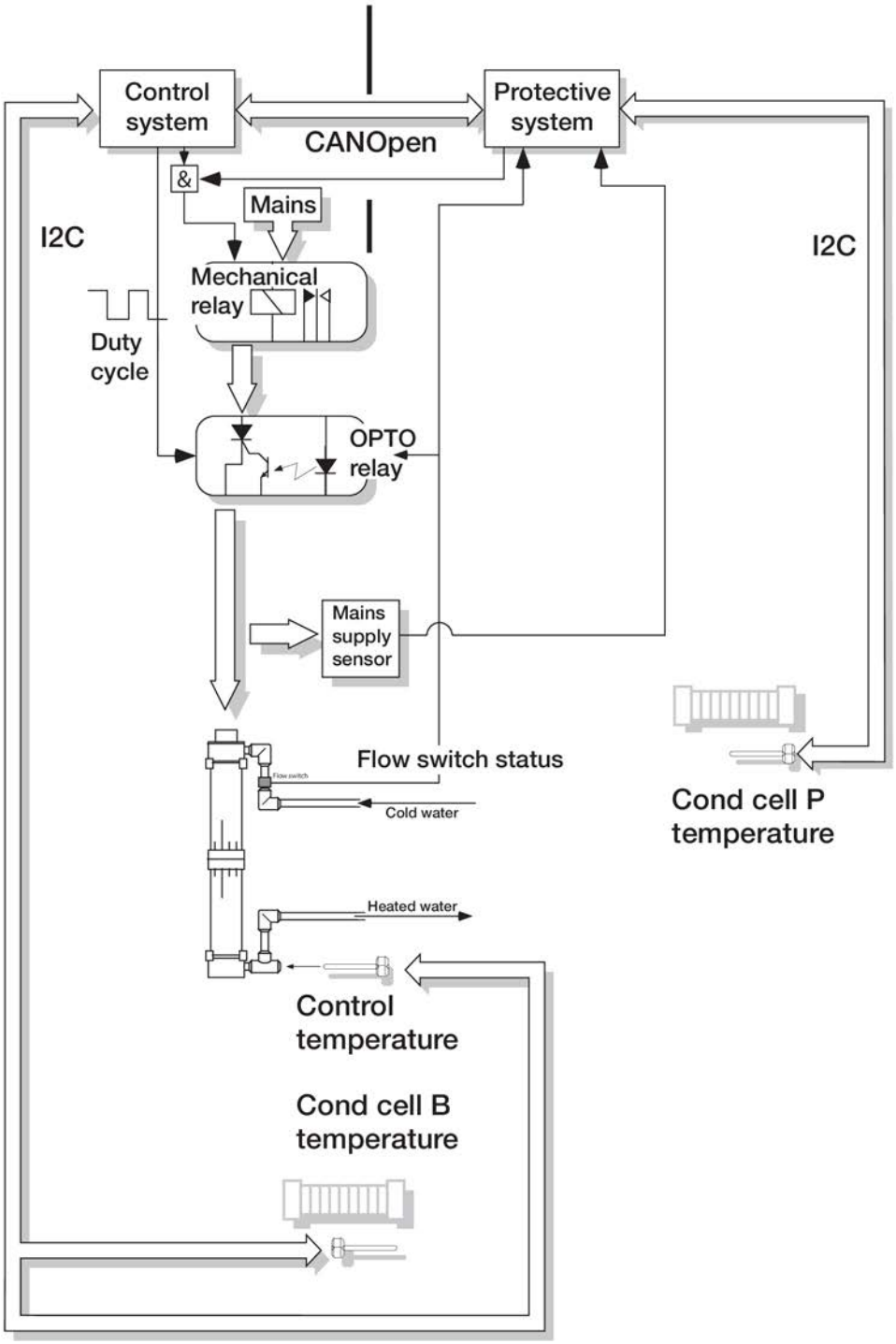

Figure 3-12. Temperature control and protective system

3.3.3.3 Disinfectant inlet

The inlet for disinfectants is placed on the rear side of the machine. The machine is for safety reasons equipped with two valves, **CHVA** and **CBVA**.

These valves are controlled separately. CHVA is controlled by the protective system and CBVA is controlled by the control system.

NOTE!
Refer to the AK 98 operator's manual for detailed information about disinfection of the machine.

3.3.3.4 Conductivity control

3.3.3.4.1 Mixing

The heated water passes through the concentrate pick-up tube connectors. If a concentrate connector is pulled out, the connector will seal and there will be a suction from the respective feeding pump to the tube's stick.

In the concentrate connector port, there is a Hall effect element that gives information to the monitor if a connector is in or out of the concentrate connector port.

The concentrate/water mixture passes via feeding pump A through a mixing chamber. The mixing chamber separates air (if any) and bypasses conductivity cell A, since air in the conductivity cell will disturb the measurement and leads to unstable conductivity control.

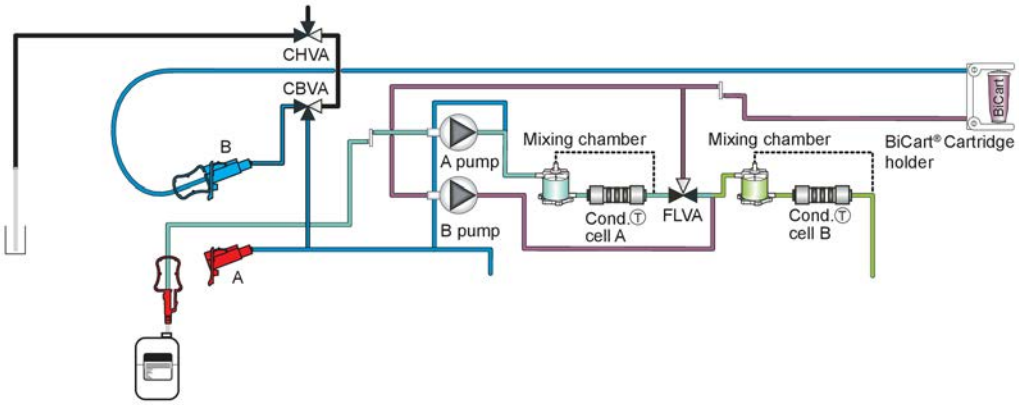

Figure 3-13. See chapter 11: "Fluid unit - flow path".

The temperature transducer in conductivity cell A has nothing to do with temperature control; it is used for compensation of conductivity measurement, which, by nature, has a positive temperature coefficient of 1.7%/°C.

The B control circuit works in the same way with the B-supply coming either from the bottom of the BiCart cartridge or from the "B" pick-up tube.

As mentioned above, the temperature transducer in the "B"-cell is used both as the second measurement in the temperature control and for temperature compensation of the conductivity measurement in conductivity cell B.

One feature of conductivity control is the supervision of concentrate pump speed. A parameter called relative pump speed is used. This expresses, in %, how much a pump's actual speed deviates from the theoretical speed.

The theoretical speed is calculated from the Na^+/HCO_3^- settings, from the preset list of the concentrate's chemical components, and the flow in channel 1. If the actual speed moves outside predefined limits, an attention is issued, and the fluid monitor goes in Bypass. The default values for these limits are:

The limits can be changed in Preset mode.

In order to optimize the dialysis treatment the concentrations of sodium and bicarbonate in the dialysis fluid can automatically be changed following a predetermined continuous decreasing or increasing linear graph. Profiling of sodium is controlled by the A-pump, and profiling of bicarbonate is controlled by the B-pump.

The Flush Valve (FLVA) is used during the priming of the BiCart cartridge. Priming means that the cartridge is filled up with warm water, and eventually, liquid bicarbonate comes out at the bottom. This is how it works:

When priming is triggered – either by the fact that the cartridge is placed in the holder before the machine is started or that the holder is opened during operation – both concentrate pumps stop. The machine runs, waiting for the measured conductivity (B) to drop below 2.0 mS/cm.

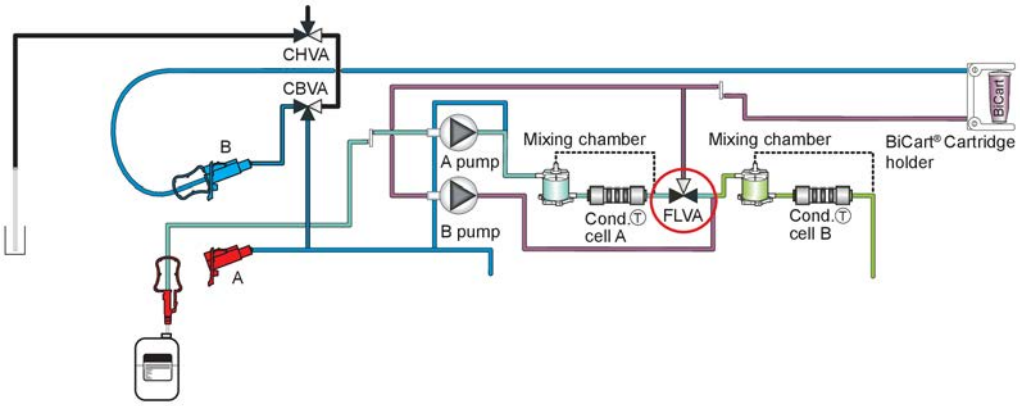

Figure 3-14. See chapter 11: "Fluid unit - flow path".

Priming starts by opening the FLVA, connecting the flow pumps suction side to the bottom of the BiCart, and running the B-concentrate pump at full speed. The machine now waits for the B-conductivity to achieve more than 5.0 mS/cm. This will normally happen within 60 seconds, if it doesn't an attention appears. Otherwise, the FLVA is closed, the B-concentrate pump is stopped, and the machine waits for the B-conductivity to drop below 2.0 mS/cm. Priming is completed.

3.3.3.4.2 Conductivity Control System, bicarbonate

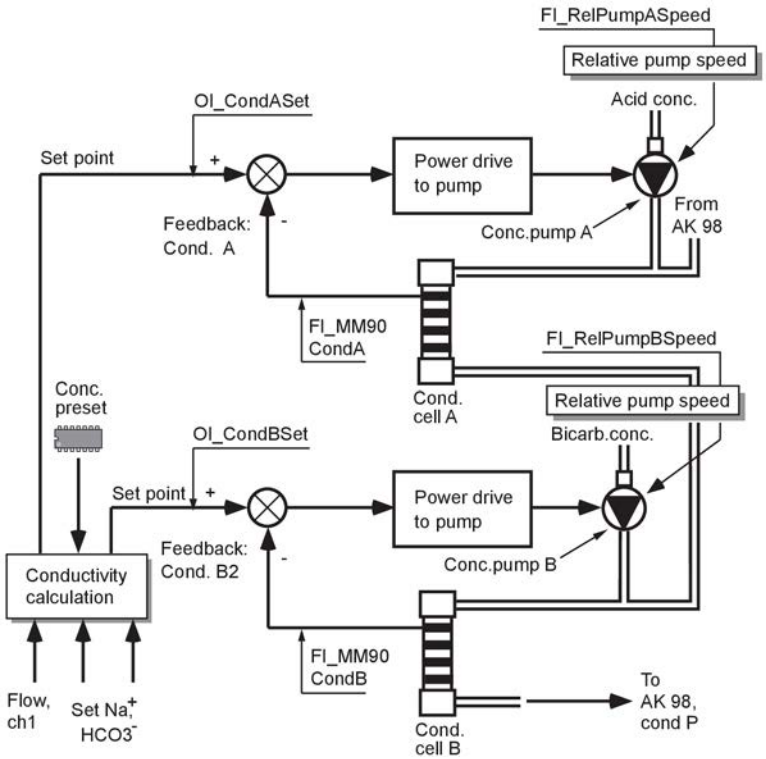

The conductivity set point is calculated on basis off the sodium set value, bicarbonate set value and the information in the concentrate preset.

The bicarbonate mode uses two feedback loops: one for the A-pump (the acid component) and one for the B-pump (the bicarbonate component). Both pump speeds are monitored and compared with the calculated speeds to ensure that pump speeds stay within limits, which are ±10% for the A-pump, and ±20% for the B-pump by default. If these limits are exceeded there will be a pump speed alarm or attention. Refer to the AK 98 operator's manual for more information.

The relative pump speed – the deviation between the actual and calculated speed, in percent, can be logged, of course, and should ideally be zero. On a machine running with WRO-supply and high quality concentrates, it will normally be very close to zero.

3.3.3.4.3 Composition supervision

The pump speed of each feeding pump is supervised by the protective system. The control system uses the conductivity values measured from conductivity cells A and B.

The conductivity cell P measures the total conductivity of the fluid.

The dialyzer is bypassed if the conductivity exceeds the alarm limits.

Despite the supervision functions, there is a risk that the dialysis fluid has the correct conductivity but an incorrect composition.

The composition of the dialysis fluid is supervised during pre-treatment and treatment, in order to detect if conductivity cell A does not measure correctly. The composition supervision can detect if the wrong concentrates are used at the same time as the conductivity is between the alarm limits. This can happen if the powder in the BiCart cartridge does not dissolve properly.

The composition supervision is monitoring the pump speed ratio. It is the actual pump speed that is monitored. An alarm or attention will be generated if the pump speed

differs more than set value (default 15%) between the two pumps. Refer to the operator's manual for the AK 98 dialysis machine for more information.

The value that triggers the alarm or attention can be logged as FI_PumpSpeedRatio. The value may vary between 850 and 1150 (default). The limits can be preset as a % (default 15%) pump speed deviation.

The variable is calculated as:

(Pump speed pump A* Dose A) / (Pump speed pump B * Dose B)

The ideal value is 1. Dose = The dilution of the concentrate depending on the concentrate preset.

3.3.3.5 Degassing/flow pump system

3.3.3.5.1 Degassing circuit

A natural process, when mixing A- and B-concentrate is the generation of free gas, carbon dioxide. This must be removed since it will disturb both conductivity- and flow measurements. The bypass tube from the top of the second mixing chamber diverts the gas away from the cell but doesn't remove it.

This takes place in a degassing circuit, consisting of a restrictor, a pump, and a degassing chamber. By pulling the fluid through the restrictor a negative pressure of approx. -600 mmHg is created (default -610). The gas expands to larger bubbles and enters the chamber:

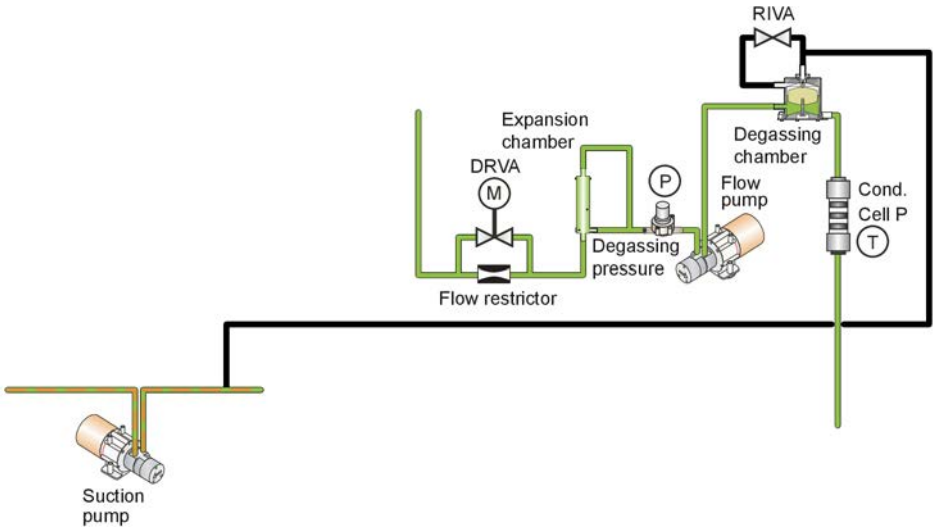

Figure 3-15. See chapter 11: "Fluid unit - flow path".

As the gas and air builds up in the chamber, the fluid level will drop until the point where the floater drops. The gas then escapes the top of chamber since there is suction here from the Suction pump. As a result, the floater jumps up again and seals the outlet, until more gas forces the fluid level down.

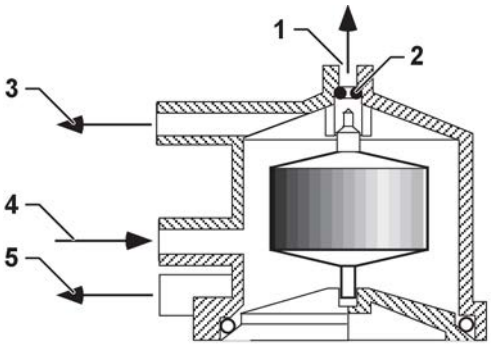

Figure 3-16. Degassing chamber.

1. Air outlet
2. O-ring
3. RIVA
4. In
5. Out

The seal in the top consists of a very small o-ring. It is placed in a plastic fixture which is screwed onto the top of the chamber. If it is missing, misaligned or damaged not only gas but also fluid will escape through the top. This will lead to reduced flow through channel 1 in the flow transducer – the UF cell.

The result of this will be pump speed alarms or attentions (“`INCORRECT CONCENTRATE`”). The reason is that the conductivity control is based upon the assumption that the flow through the conductivity cells is the same as the flow in channel 1. A leakage in the top of the degassing chamber will therefore lead to decreased pump speeds and the corresponding attentions. Or if it is big 0505 006 003.

3.3.3.5.2 Preset of the degassing pressure

The Flow Pump generates the negative degassing pressure by pulling the fluid through the degassing restrictor.

The default preset value is -610 mmHg, but can be preset to other values (-300 to -700 mmHg in 5 mmHg steps) in case the AK 98 dialysis machine is operated at other altitudes than sea level.

Relation between pressure and altitude:

$P_{degass} = - ((760/e^{h/7338}) - 150)$ (mmHg).

Degassing pressure (P_{degass}) as function of altitude (h):

Table 3-2. Degassing pressure as function of altitude

h (m)	P_{degass} (mmHg)
3800	-302
3000	-355
2373	-400
2200	-413
2000	-429
1800	-445
1600	-461
1400	-478
1147	-500
1000	-513
800	-532
600	-550
400	-570
200	-590
0	-610

3.3.3.5.3 Degassing Pressure Control System

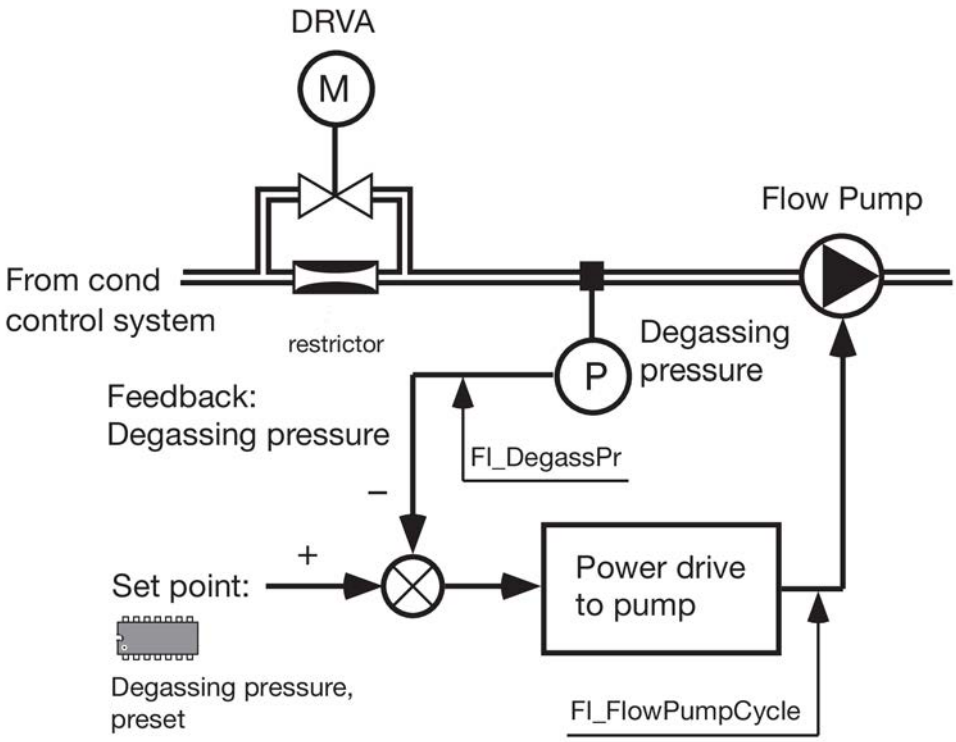

The Flow Pump generates the negative degassing pressure by pulling the fluid through the degassing restrictor.

The degassing pressure set point comes from the presets. The default value is -610 mmHg, but can be preset to other values (-300 to -700 mmHg in 5 mmHg steps) in case the AK 98 dialysis machine is operated at other altitudes than sea level. See the relation between pressure and altitude in Table 3-2 “Degassing pressure as function of altitude” on page 76.

3.3.3.5.4 Adjustable dialysis fluid flow

The fluid flow in the AK 98 dialysis machine can be adjusted between 300 mL/min to 700 mL/min in 20 mL/min steps.

The control is done with an adjustable valve (DRVA) driven by a stepper motor with an aspheric axis connected in parallel with a 200 mL/min restrictor.

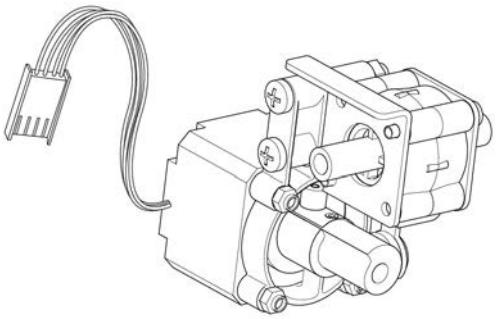

To make sure that the flow is stable, the machine will postpone an adjustment of the flow 120 seconds before and 30 seconds after taration.

If a flow deviation of 30 mL/min or more (compared to the set flow) is detected continuously for 3 minutes, an automatic adjustment of the flow will be triggered. The automatic adjustment can be activated once after each self calibration of the UF cell also called taration. The time needed to activate the automatic adjustment is only counted when the dialysis fluid is considered to be stable.

3.3.3.5.5 Conductivity guard

The third conductivity cell, conductivity cell P, right after degassing, is used by the protective system as a guard. Like the two cells used by the control system, it has its own temperature transducer for temperature compensation of the conductivity measurement.

The dialysis fluid is bypassed if the conductivity value differs more than ±5% from the calculated set value and/or the temperature exceeds the limits. The low limit is 33°C ±0.5°C and the high limit is 40°C ±0.5°C.

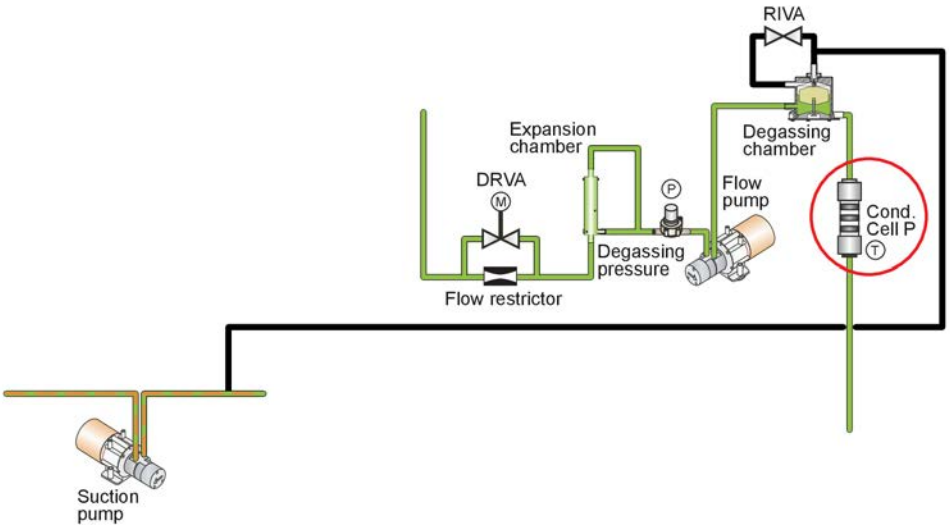

Figure 3-17. See chapter 11: "Fluid unit - flow path".

3.3.3.6 Fluid output – UF control system

3.3.3.6.1 Fluid output

After the conductivity cell P, the pressure is monitored by a pressure transducer, the HPG – High Pressure Guard. It protects the dialyzer if the fluid tubes are blocked after the dialyzer. If the tubes are blocked before the dialyzer, it protects the machine (from tube disconnection).

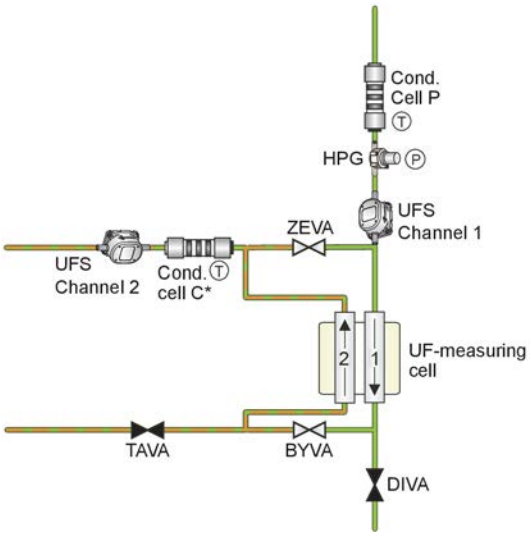

Figure 3-18. See chapter 11: "Fluid unit - flow path".

The flow is then measured by channel 1 in the UF cell (to be used for the UF control) and passes through the DIVA, Direct Valve, provided the temperature and conductivity are both inside limits.

In an alarm situation, i.e. if the conductivity and/or temperature are outside limits, the DIVA will be closed, and the fluid will bypass the dialyzer through the BYVA – Bypass Valve.

The dialysis fluid is forwarded to the dialyzer via the blue dialysis fluid tube.

From the dialyzer the dialysate (dialysis fluid mixed with waste products and excess fluid) is returned to the machine via the red dialysis fluid tube.

3.3.3.6.2 TMP calculation

The fluid returns to the machine through a particle filter which physically is placed inside the fluid tube connector. The pressure is measured by the PD transducer (Pressure Dialysis), physically mounted on the Deaerating chamber house. The PD value is used, together with the Venous Pressure to calculate the Trans Membrane Pressure – the TMP:

TMP = P venous - P dialysis

Example:

P venous = +120 mmHg, P dialysis = -300 mmHg

TMP = +120 -(-300) = +420 mmHg

TMP is only shown as information. The UF protective system is used as supervision of the UF control system.

3.3.3.6.3 Flow Calculation - UF Protective system

The UF Protective feature has two additional flow meters installed in the flow path, as shown in Figure 3-9 “See chapter 11: "Fluid unit - flow path"” on page 66. These sensors measure the same physical flow as the UF control system, and provide independent flow data for the UF protective system. The UF protective system is used as supervision of the UF control: It is monitored with alarm limits and displayed.

3.3.3.6.4 Safety Guard

When the machine is not in treatment mode the dialyzer tubes are placed in the safety coupling, where the pressure is monitored by the SAGS – Safety Guard Switch. It ensures that none of the hygiene programs can be started when the tubes are removed from the coupling.

The function SAGS is doubled by mechanical switches which sense the presence of the connectors.

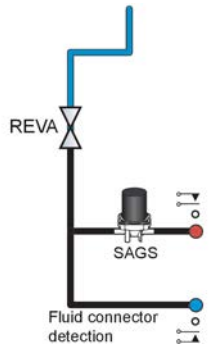

Figure 3-19. See chapter 11: "Fluid unit - flow path".

3.3.3.6.5 Deaerating

In case of worn O-rings inside the dialyzer connectors (the Hansen connectors), an incorrectly placed tube or insufficient priming of the dialyzer, the returning fluid will – due to the negative pressure – contain air-bubbles which must be removed before it reaches channel 2. This process takes place in the deaerating chamber:

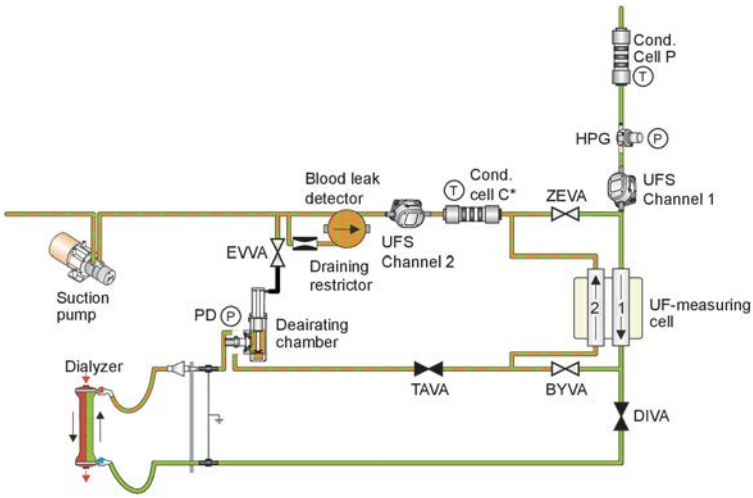

Figure 3-20. See chapter 11: "Fluid unit - flow path".

The fluid level in the chamber is monitored by a ring-shaped floater, containing a magnet which activates a reed relay if the level drops below approx. 15 mm. The

EVVA , the Evacuation Valve will then briefly open and let out air – the level goes up. A second reed relay is used to detect high level (too high level) in the chamber.

The valve, following immediately after the chamber – the TAVA, Taration Valve – is used for the so-called taration or UF cell self-calibration. It will be described later in this document.

3.3.3.6.6 UF control

The UF rate is controlled by the Suction pump. The AK 98 dialysis machine has one “machine” treatment mode only: “Volume control”. In this mode the operator is required to set two parameters:

- Treatment Time
- UF volume

From these two parameters the machine calculates the corresponding set UF rate: **Set UF rate = Set UF volume /Set Treatment Time**

The set UF rate is displayed in the treatment overview fields.

If UF-profiling is used, the set UF-volume is changed over time according to the chosen profiling curve. Three different profiling curves for the UF can be chosen: `LINEAR`, `STEP` and `INTERVAL`. More information about UF-profiling is available in the AK 98 operator's manual.

During treatment the actual UF rate is constantly measured by subtracting the channel 1 flow from the channel 2 flow.

The measured UF rate is compared to the set UF rate and the speed of the Suction pump is controlled by the difference between them.

Once per minute the machine will check the remaining treatment time and the remaining UF volume and internally adjust the set UF rate. The limit (high limit) for the set UF rate is +20% of the rate set by “Time” and “UF Volume”.

3.3.3.6.7 The UF Control System

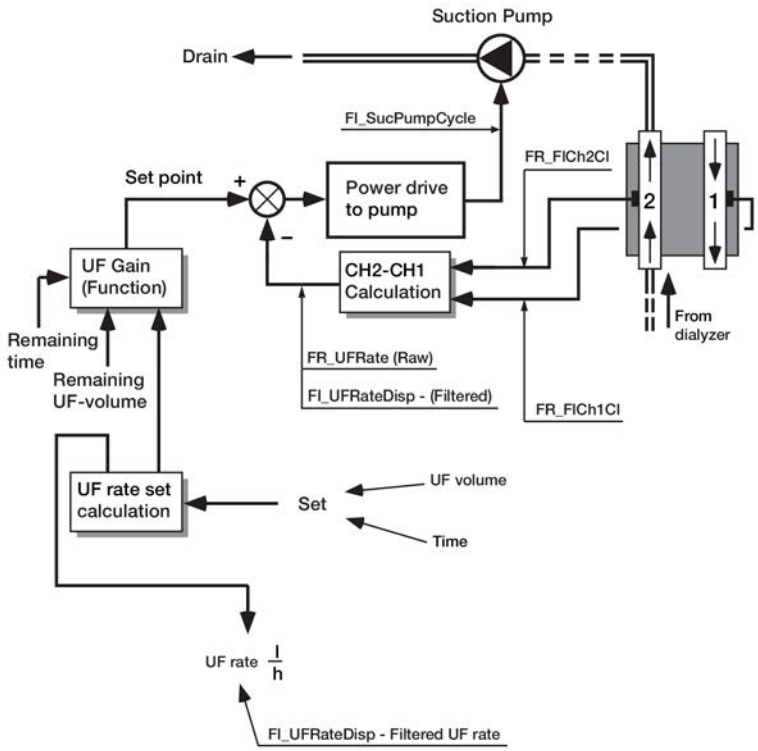

Two parameters are needed to set the UF rate:

- Treatment time
- UF volume to be removed

The machine will once per minute calculate:

- Remaining UF volume = (UF volume set - UF Accumulated volume)
  UF rate set = (Remaining UF volume / Remaining Time)

The function “UF Gain” compensates for the tarations, i.e. 2 per hour. This is necessary, since UF volume is lost during a taration. Since it is possible for the machine to discard a taration, and hence do another five minutes later, “UF Gain” will constantly check the taration timer to see when the next is done.

3.3.3.6.8 UF control taration

Channel 2 in the UF cell carries the dialysate, i.e. dialysis fluid containing the ultrafiltrate removed from the patient’s blood. This is a biological substance and it will during the treatment form a deposit on the channel walls. This deposit is called a biofilm. The film will reduce the area of the channel 2, thereby affecting the sensitivity of channel 2. In other words: Channel 2 will loose some of its accuracy, as the treatment progresses.

To compensate for this, channel 2 is calibrated every 30 minutes with channel 1 used as reference. The process is called taration or self-calibration. It works as follows:

The self-calibration is divided in following three phases:

1. Prepare Taration phase
2. Zero Flow phase
3. Differential Flow phase

Before the taration starts, a calibration of the UF cell's pre-amplifier circuits takes place, but this is not noticeable for the user. In parallel with this taration the UF protective system also runs a similar taration.

Prepare Taration

The Zeroing Valve (ZEVA) opens to let the fluid bypass the UF cell. The Rinsing Valve (RIVA, normally used in disinfection) opens for the degassing chamber to fill up, which keeps the floater from dropping during the following phases as this would disturb the taration.

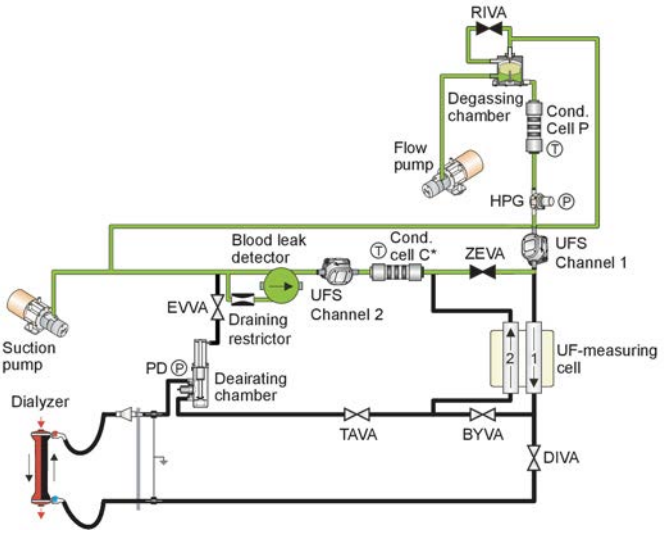

Figure 3-21. See chapter 11: "Fluid unit - flow path".

Zero Flow

RIVA closes again, ZEVA is kept open, i.e. there is no flow through any of the channels. The machine now generates an offset value – a number very close to zero – for each channel. The two values are stored in RAM.

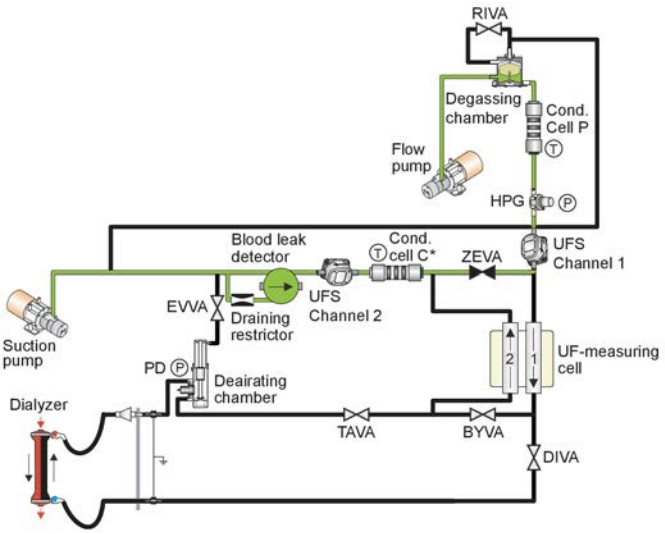

Figure 3-22. See chapter 11: "Fluid unit - flow path".

Differential Flow

ZEVA now closes. The Taration Valve (TAVA) is closed and BYVA opens. The channels are now placed in series, which means that the flow in channel 2 is the same as the flow in channel 1.

The calibration coefficient – a number very close to 1.00 – for channel 2 is now changed until the difference between the channels is zero. Channel 2 now has the same sensitivity as channel 1. The calibration coefficient is stored in RAM.

The first taration takes place immediately before green fluid path is displayed and the second taration five minutes after blood has been detected. Then taration takes place every 30 minutes.

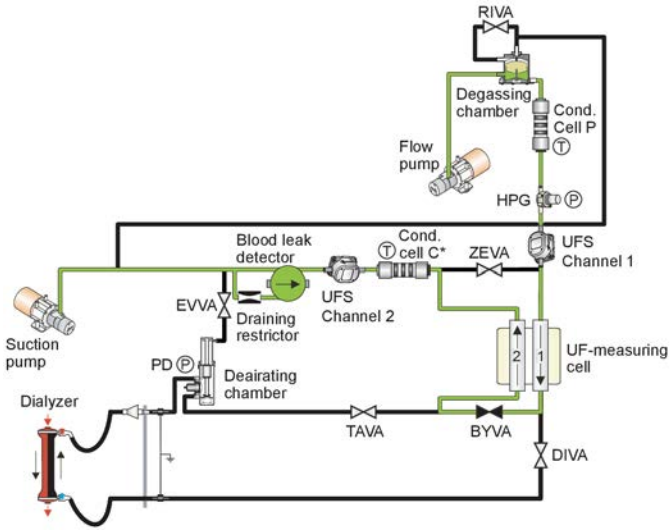

Figure 3-23. See chapter 11: "Fluid unit - flow path".

Approved/not approved

The calibration values (two offsets, one coefficient) generated during the first taration are compared to the corresponding values in the UF cell's E2PROM. If they don't differ too much, the taration is approved, the Taration Timer is set to 0 seconds, counting up to 1800 seconds (30 minutes) for the next taration.

From the second taration and onwards the machine will use the last taration's values as comparison. If the calibration values differ too much the taration is not approved. But since the taration is a sensitive process that can be disturbed by e.g. an air bubble during the offset phase, a new taration will be performed again after 5 minutes. In case of a not-approved taration the Taration Timer will be set to 1500 seconds, starting a taration when it reaches 1800 seconds.

Prolonged taration

Before the taration starts the machine looks at the variation of the flow signal:

If the flow is unstable, each phase (offset and differential) will take 15 seconds longer: The Taration Timer counts up to 1545.

If the re-taration fails

If a re-taration is requested and this re-taration fails an error code will be issued.

3.3.3.6.9 The UF Supervision System

The accumulated volume is supervised by the protective subsystem, independently of the control subsystem.

The protective subsystem calculates its UF volume by integrating the UF rate over time.

The protective subsystem supervises the calculated UF volume against the expected UF volume, which also is calculated from the treatment parameters.

If the accumulated volume of the protective subsystem exceeds its alarm limit an alarm is generated and further volume removal is prevented.

The UF supervision volume deviation alarm limits are widened with time in treatment when combined control system and protective system flow sensors accuracy limit exceed a preset limit (mL).

The UF supervision volume deviation alarm limits are whichever is largest of:

1. UF supervision volume limit start value.
2. (UF supervision volume limit widening rate) * (passed treatment time).
3. (UF supervision volume limit widening rate * passed treatment time) + (2.5 % of UF rate part above 2 L/h) * (passed treatment time with UF rate above 2 L).

! **NOTE!**
The UF volume limit start value and the UF supervision volume limit widening rate can be preset by a service technician.

The UF volume limit start value can be preset in range between 200-400 ml. (default 300 mL).

The UF supervision volume limit widening rate can be preset in range between 100 -135 mL/h (default 135 mL/h).

The alarm can be acknowledged by the operator for one time (which results in a widening of the acceptance criteria with the preset value UF supervision volume limit start value (see above).

The measured accumulated UF volume is not reset. If this extended acceptance criteria is not met, then the operator is not able to acknowledge this alarm, but requested to terminate the treatment.

In case of a detected alarm situation, the safe state reactions of the protective system are as follows:

- Protective system stops fluid from reaching dialyzer (DIVA close, BYVA open, TAVA close, EVVA close)
- Protective system activates audible and visual alarm.

3.3.3.6.10 UF protective taration

The UF protective measurement performs a taration in parallel with the UF control measurement, and cannot affect its duration.

The taration works as follows:

The self-calibration has two phases:

1. Prepare Taration phase
2. Differential Flow phase

Prepare taration and differential flow

Due to the location of the UF measurment cells for the UF protective measurement there is no zero flow phase, instead the differential flow phase is prolonged.

3.3.3.6.11 Diascan® - Conductivity cell C (option)

The Diascan system can be used for:

- Clearance measurement (K) in order to read the current dialysis efficiency for the on going treatment
- Dialysis dose measurement (Kt or Kt/V) in order to check that the prescribed dialysis dose is being maintained, which provides quality assurance for the treatments.
- Kt/V target supervision , which means that the machine constantly calculates if the desired and minimum values for Kt/V, set by the operator for each individual patient, can be reached at treatment end. If not, the operator will immediately be notified during treatment.

  If Kt/V measurement is required, a distribution volume VOLUME has to be set before the measurement check takes place. The distribution volume is patient-related (based on the patients dry weight) and has to be properly calculated and set by the operator in order to obtain a correct Kt/V value.

Hardware

The hardware is an extra conductivity cell. The conductivity cell is used to measure the conductivity after the dialyzer. The Diascan cell has a temperature sensor, PT-100, for temperature compensation of the conductivity value. The temperature can not be logged like the other temperature transducers, since the conductivity value is compensated for temperature already in the cell. The cell cannot be calibrated in the field.

The Diascan cell is offset, to match the P cell, as the UF cell is performing taration. The reason for the offset is the fact that the cell is after the dialyzer. This means that it is affected by the biofilm and hence the offset.

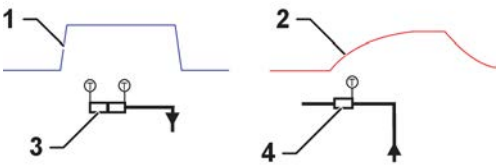

Figure 3-24. Conductivity.

1. Conductivity P
2. Conductivity Diascan cell
3. Conductivity cell P
4. Diascan cell

Function

The Diascan cell measures the effectiveness of the treatment or the K. K for clearance or how many mL/min of blood that has been cleared from urea. However the machine cannot measure urea. But the machine can measure sodium ions. Sodium ions has about the same size as urea.

The idea is to calculate the clearance of sodium or how the transport of sodium is done over the membrane. The calculation also takes in consideration things that decrease the transport capacity like the actual blood flow, fluid flow, clotting, fistula recirculation and many other factors by increasing/decreasing the sodium level in a step of 0.5 mS/cm for about 5-7 minutes and then measure the conductivity before and after the dialyzer, the ability of the dialyzer to transport sodium can be calculated. Depending on

sodium level in the blood and in the dialysis fluid, the step will either be negative or positive.

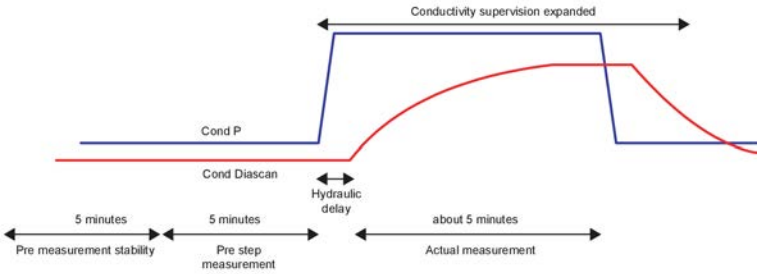

How often the measurement is done is a preset (start value). Before the measurement is done the flow condition has to be stable for 5 minutes and then the actual measurement is done for 8-10 minutes.

If stable flow conditions are not met the measurement is delayed until the conditions have been stable for 5 minutes. Then there is a measurement of the pre step condition (5 minutes) then step is added and the actual measurement is done. The time can be a bit flexible depending on the hydraulic delay and the preset of the step length. If a measurement of pre step condition is disturbed by an alarm or change of blood flow, the measurement is rescheduled to be performed again when the conditions are stable.

The limits for conductivity are widened during the measurement and until 1 minute after. Stable flow conditions:

No changes in: Blood flow, UF-rate or Fluid composition No: UF-tarations (bypass) or Bypass Alarms (bypass or blood pump stop)

The following can interrupt a measurement:

- Blood flow stop or change
- UF stop
- sodium and bicarbonate (conductivity)
- temperature
- dialysis fluid flow
- UF volume
- profiling settings

If a measurement is interrupted, the measurement will be rescheduled until stable flow conditions are met.

If the limit for sodium load has been reached an attention is issued.

3.3.3.6.12 Blood leak detection

Blood leakage is detected by a detector situated between channel 2 (or the optional conductivity cell C, if it is installed) and the Suction pump.

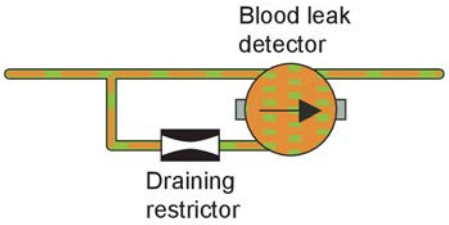

Figure 3-25. See chapter 11: "Fluid unit - flow path".

The restrictor in the bottom facilitates the complete draining and filling of the detector house, by restricting the outflow, thus forcing the house to empty slowly and fill up completely.

Finally, the dialysis fluid is led to the drain, via the suction pump, the outlet restrictor and the heat exchanger.

3.3.4 FM component description

Pressure regulator, PR 1 & PR 2
Two different pressure regulators, with different springs inside, are used to decrease the pressure in two steps.

PR1: 0.8 Bar/600 mmHg

PR2: 130 mmHg

Heat exchanger
The heat exchanger is used to raise the temperature on the inlet water. Machines made for 230 V are equipped with two heat exchangers while machines made for 115 V are equipped with four heat exchangers.

Pressure switch: SAGS & INPS
The pressure switch is used to monitor if there is an inlet pressure (INPS) and if the dia connectors are connected to the machine before a disinfection program is started (SAGS).

The pressure switch is switching on and off as below:

SAGS: on = -74 mmHg off = -59 mmHg

INPS: on = 150 mmHg off = 99 mmHg

Flow Switch
The flow switch is used to check if there is flow through the heater. The flow switch contains a glass tube, a floater, and an infrared sensor.

Heater unit
There are two different heater units:

- one for 115 V/1300 W
- one for 230 V/3*580 W.

The Heater unit for 230 V contains three windings of each 580 W. The heater unit is controlled with a duty cycle.

The heater unit is connected to the relay board, via a cable. The temperature transducer is connected to a transducer board, via a cable. The transducer board interfaces directly to the General I/O board, via a board connector.

The temperature maximum deviation from set value is 35°C to 39°C (default) the limit is wider during priming, low limit is 32.5°C. If the temperature exceeds these limits a temperature alarm is issued.

Feeding pumps

The water flushes through the ceramic house of each pump to create a water film which acts as a lubricant. The pumps are ceramic high-precision units, they never wear out, and never need calibration.

This is how the pump works: The pump piston has a small cut-away on the last 5–6 mm. By combining rotation with an up–and–down movement, the pump volume is “sucked–lifted–moved–and–pressed” from the pump inlet to the outlet. (What is inlet and outlet is simply a question of which way the piston rotates).

The piston is rotated by a stepper motor – the up–and–down movement comes from mounting the pump at an angle to the motor. The small pin on the piston is connected to the rotating plastic arm through a spheric (ball-shaped) bearing for full freedom of movement.

Mixing chambers

The mixing chambers are used to mix the fluid and bypass air, if any, to avoid disturbance in the conductivity measurement.

A mixing chamber consists of a housing and a nipple in the top. The housing is sealed with an O-ring in the top and welded together in the bottom.

Conductivity cells

The conductivity measuring unit is used to measure the conductivity of dialysis fluid composition. It consists of a mechanical part, a transducer board, two shielding carbons and a PT-100. The mechanical part consists of plastic isolators and carbon electrodes.

The transducer board contains driver and receiver circuitry. The shielding carbons are used to protect the measurement from noise in the fluid path. The conductivity of the fluid is dependent on the temperature and the PT-100 is used to measure this.

There are four different conductivity cells in the machine:

- Conductivity cell A
- Conductivity cell B
- Conductivity cell P
- Conductivity cell C (Diascan®) (option)

Conductivity cell P, located right after degassing, is used by the protective system as a conductivity guard.

BiCart® cartridge holder

The BiCart cartridge holder is a device to hold the BiCart cartridge or the CleanCart cartridge. Bicarbonate concentrate is produced by mixing water with bicarbonate powder inside the disposable BiCart cartridge.

Citric acid is produced in the similar way using the disposable CleanCart cartridge. Fluid spillage is prevented by valves. Magnet sensors indicate closed arm position.

Flow pumps

Gear pumps controlled with a duty cycle.

Degassing chamber

The chamber has four connectors, inlet, outlet, air outlet and rinse valve (RIVA). A floater is placed inside the chamber. The top of the float consist of a needle which seals against a very small o-ring inside the air outlet connector. The gas escapes the top of chamber since there is suction here from the Suction pump. As a result, the floater jumps up again and seals the outlet, until more gas forces the fluid level down.

UF measuring cell

The UF cell – is based on the electromagnetic flow measurement principle (Faraday's Law of Induction):

The voltage V, is proportional to the velocity of the fluid, the area of the measuring channel and the magnetic field. From this follows that if the field is kept constant the voltage will be proportional to the flow only.

For this to happen the field, the tube, and the electrodes shall be aligned 90° to one another and the fluid shall contain free ions. In practice, independence of conductivity is achieved when conductivity is higher than 0.1–0.2 mS/cm.

Another practical consideration is that the magnetic field must alternate. Otherwise the presences of free ions would lead to electrochemical deposits on the measuring electrodes.

UF protective flow meters

The UF protective system is based on two flow meters. The UF protective system rely on the same electromagnetic measurement principle as the UF cell.

Ultrafilter (option)

An ultrafilter (U 9000) is inserted in the fluid path in the front of the dialyzer and acts as a bacteria and endotoxin filter.

Deaerating chamber

Plastic chamber containing a magnetic floater which slides on a pin with two reed relays inside. The floater can have tree positions: high, low and middle (not high and not low).

Blood leak detector

The transducer is a LED.

The receiver is a photo transistor.

Pressure transducers

The pressure transducers are so called Gauge transducers which means that the pressure transducer uses the atmospheric pressure as reference. The transducers are connected to the main electronic via data buses.

3.4 Extracorporeal blood circuit description

3.4.1 Product description - Blood unit

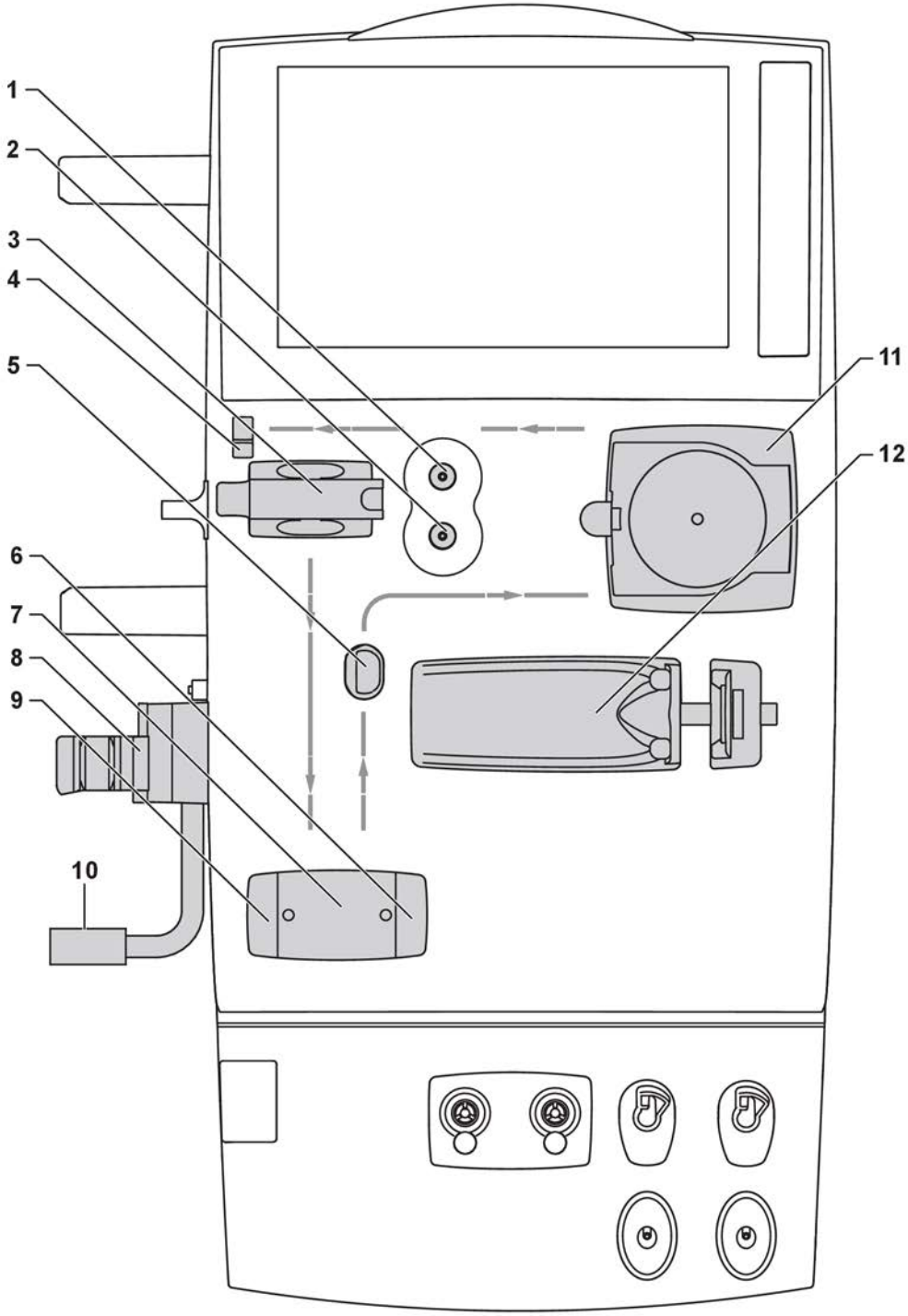

Figure 3-26. Blood unit components

1. Venous pressure transducer
2. Arterial pressure transducer
3. Air detector
4. Blood line guide
5. Blood line guide
6. Arterial blood line clamp
7. Priming detector
8. Expansion chamber holder
9. Venous blood line clamp
10. Dialyzer holder
11. Blood pump
12. Heparin pump

3.4.2 Treatment modes and disposables

3.4.2.1 Double needle treatment

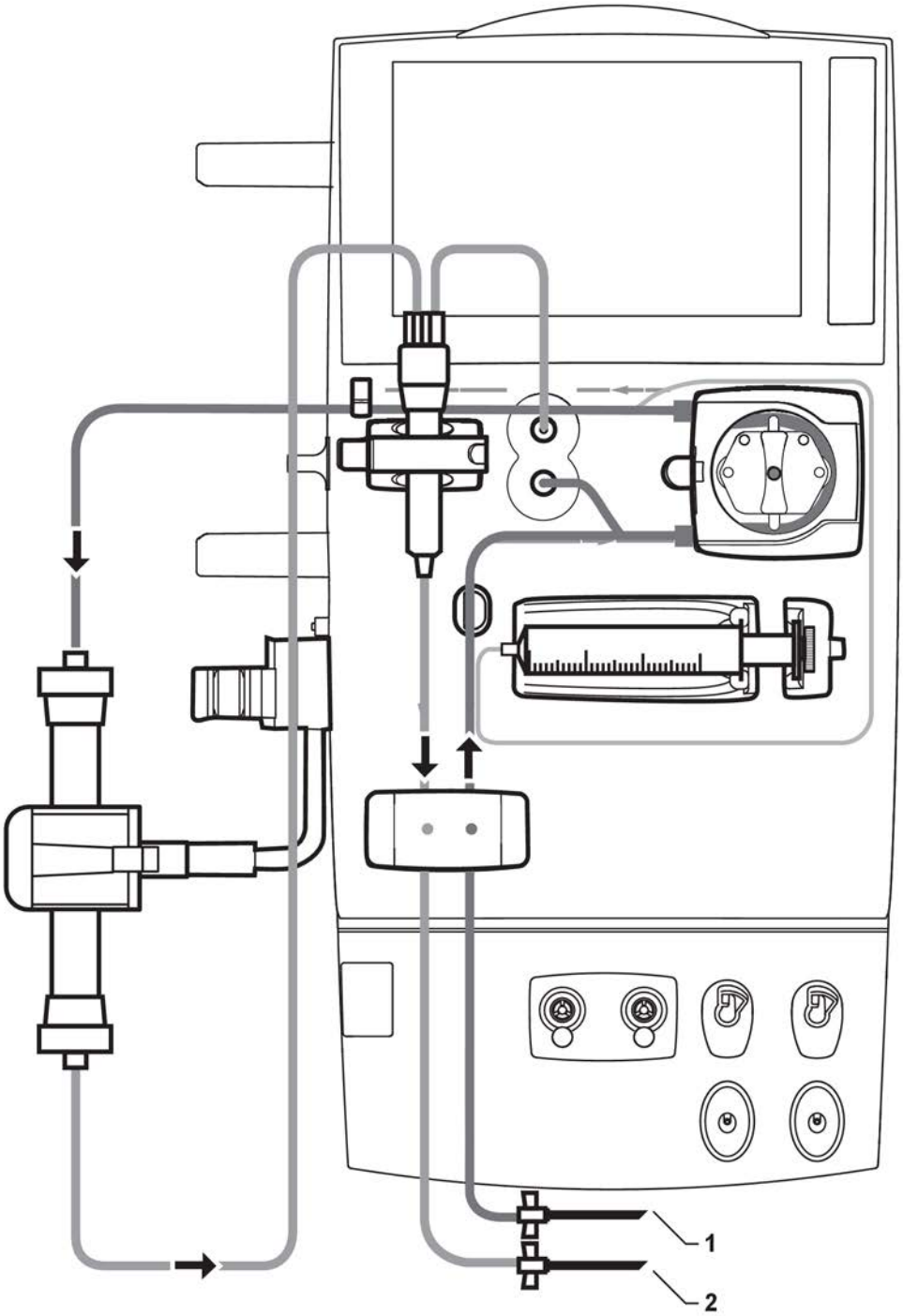

Figure 3-27. Arterial and venous blood lines setup in HD - double needle mode

1. Arterial blood line
2. Venous blood line

3.4.2.2 Single needle treatment

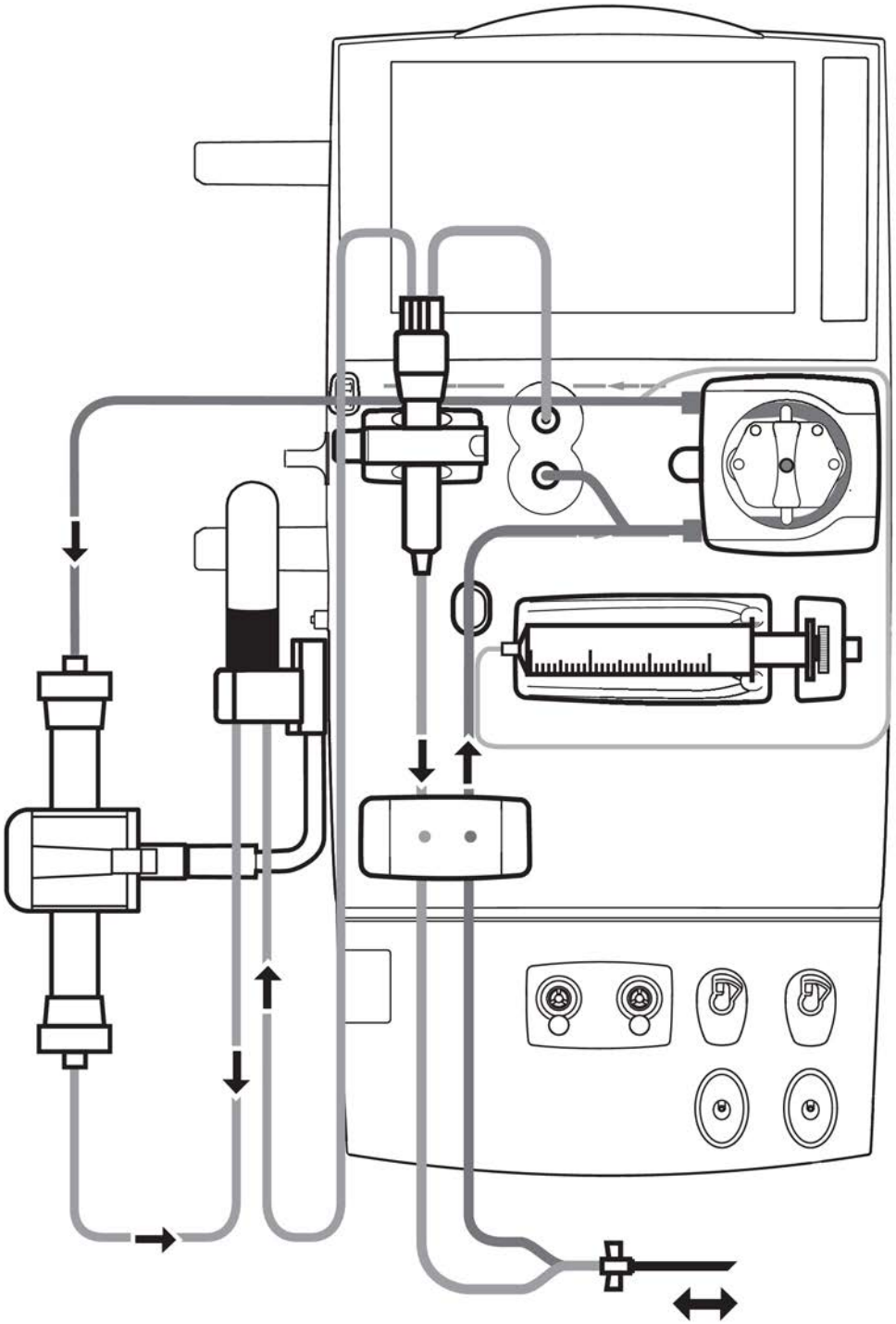

Figure 3-28. Arterial and venous blood lines setup in HD - single needle mode

3.4.3 Blood flow

3.4.3.1 Blood flow diagram

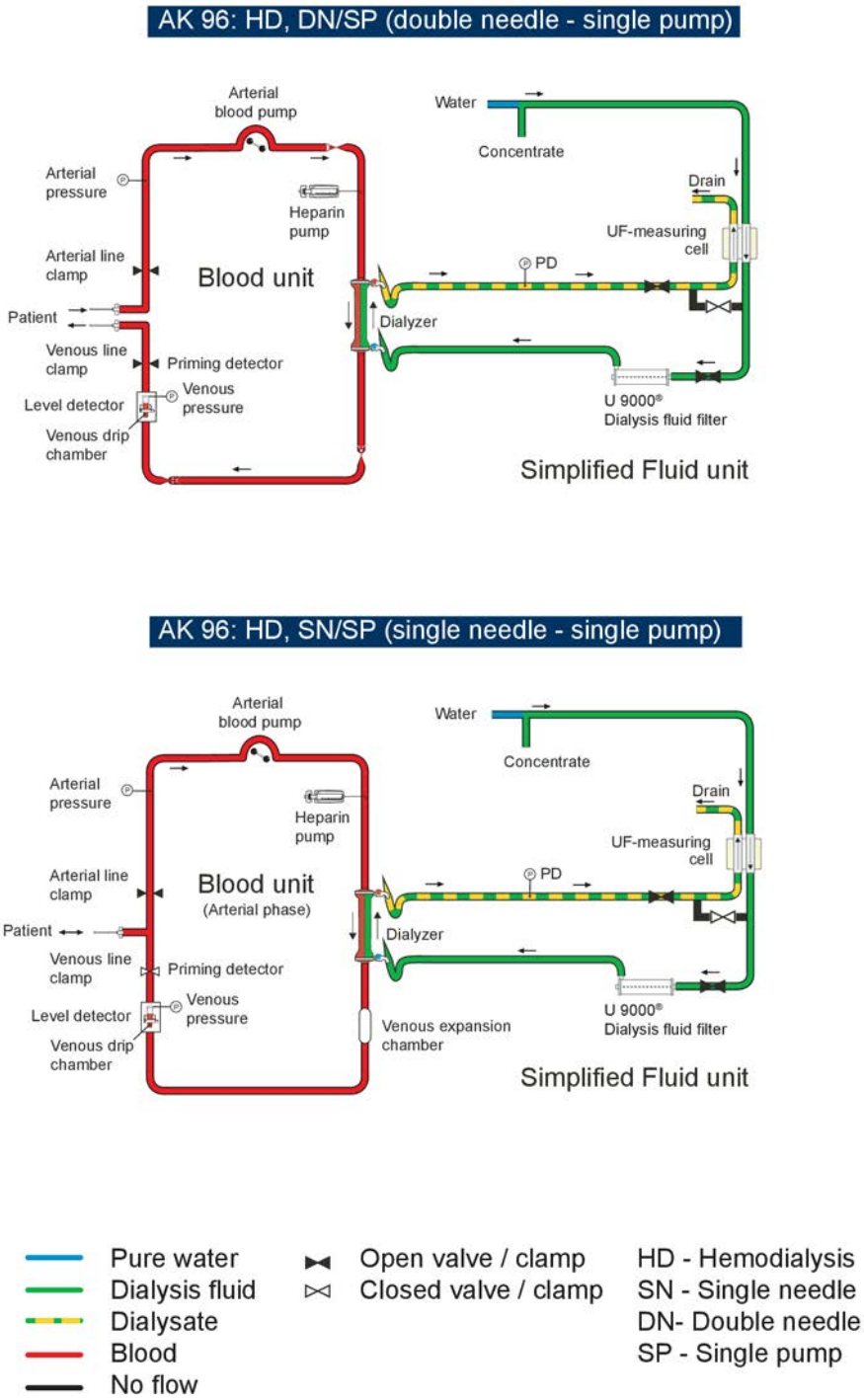

Figure 3-29. See chapter 11: "Fluid unit - flow path".

3.4.3.2 Blood flow description

Arterial blood from the patient's vascular access, passes the **arterial line clamp**. During treatment the line clamp is open. The **arterial pressure transducer** is used to give an alarm if the pressure becomes too low. For example, if the needle or the arterial blood line is blocked, an alarm will be given (the blood pump is stopped). The

alarm is activated if there is an increased negative pressure between the patient and the blood pump, e.g.:

- A drop in blood pressure
- Altered positions of the arterial needle
- A kink in the arterial line between the patient and the blood pump.

The function of the **blood pump** is to maintain the extra corporeal blood flow. Blood is removed from the patient, forwarded to the dialyzer, and then returned to the patient. The blood pump cannot be run when the pump cover is open. If necessary, the blood can be returned to the patient manually.

The blood passes the dialyzer under controlled ultrafiltration. Refer to the AK 98 operator's manual for more information about the treatment conditions and operating instructions.

The purpose of the **heparin pump** is to add anticoagulantia (e.g. heparin) to the blood. An alarm is issued when the syringe is empty or if the line from the syringe to the arterial blood line is kinked. To adjust heparin pump parameters:

1. Press the `Blood` button.
2. Select the `Heparin` tab.
3. Press `Heparin bolus volume`.
4. Press the settings one by one and set the desired treatment parameters.

The venous pressure transducer measures the venous blood pressure after the dialyzer. The **Venous Pressure meter** is flashing and the loudspeaker sounds if the alarms are activated and the venous blood pressure is outside the alarm limits. In the event of an alarm, the blood flow is stopped.

The AK 98 dialysis machine has double **venous pressure transducers**: one for the control system and one for the protective system. An out of limit value on any of the transducers will put the monitor in a patient safe state.

Venous pressure is used for the back filtration warning (i.e. negative TMP). In the event of a leakage on the venous side of the blood line it will stop the blood pump to avoid patient blood loss.

High venous pressure may be caused by the following:

- An obstruction after the venous drip chamber
- A change in the patient’s position

Low venous pressure may be caused by the following:

- A line separation
- A drop in blood pressure
- A change in the patient’s position

The **level detector** has the following function:

If the blood level in the venous drip chamber is too low, an alarm is given and the blood flow is stopped (the blood pump and heparin pump are stopped, and the venous line clamp is closed). The venous drip chamber acts as an expansion chamber to even out pressure pulsations.

When the air detection alarm is generated, the Alarm tab is flashing and the loud speaker sounds. To resolve the alarm situation the Operator can press the **Timer** button on the alarm text. The air detector alarm is bypassed for 10s (possible to preset to 0-15s). When the alarm situation is resolved, the operator shall clear the air detection alarm by pressing **Confirm** on the alarm text.

The **priming detector** detects if there is blood in the venous blood line. If no blood is detected, it is not possible to start the treatment.

The priming detector is a two-channel device. One of the channels is connected to the control system and the other channel is connected to the protective system.

The purpose of the priming detector is to facilitate priming by suppressing certain alarms when no blood is in the venous line.

The control system outputs a pulse train to the transmitting side (an LED) of the priming detector head.

When blood is detected for more than 20 seconds, the control system and the protective system disconnect the priming detector function and keep the AK 98 dialysis machine in blood mode until the end of the treatment, i.e. when Time = 0:00 is confirmed. Confirmation is done by confirming the attention

```
596 Treatment time expired
To continue press Confirm.
```

.

When the monitor is out of blood mode, it is possible to leave treatment mode.

The blood is transported back to the patient via the **venous line clamp**. The clamp is normally open. But in the event of an alarm from the air detector or the venous pressure transducer, the line clamp clamps the blood line and stops the blood flow (except during a high pressure alarm).

3.4.3.3 BPM - blood pressure module (option)

The **BPM** monitor is a measuring device that can issue attentions and alarms but the alarms will not interfere with the treatment.

The intended use for the BPM is to measure the patient's blood pressure and to activate an alarm if the patient's blood pressure drops below the alarm limit set by the operator. This will give the nurses the possibility to take measures before the patient suffers the ill effects of hypotension (low blood pressure).

The BPM module includes the following components: air pump, bleed valve, dump valve, pressure transducers (control and protective), and microprocessor board. The module includes control and protective systems.

The control system measures the pressure and pulse wave to calculate the systolic, diastolic, mean blood pressure and pulse rate. The air pump, dump, and bleed valves are controlled by this system as well as externally.

The protective system supervises the maximum pressure and inflating time. The maximum pressure is 320 ± 10 mmHg, and the maximum inflating time is 180 seconds. When these values exceed specified limits, the dump and bleed valves are opened and the air pump is stopped by the protective system.

A self-calibration/auto zero function is included in the module, which means that the offset for the pressure transducers is calibrated/adjusted each time the module is turned on.

The BPM measures and calculates non-invasive blood pressure by using the oscillometric method. This method uses the pulsations that occur in the artery of the arm when it is restricted by the inflated cuff. The noise or oscillation originates from the fact that when the cuff restricts the vessel, the flow in the vessel becomes turbulent, instead of laminar. The pulsation causes the pressure in the cuff to oscillate, which the pressure transducer in the BPM module measures.

The relationship between the changes of cuff pressure and its oscillation is used to determine the blood pressure. When the BPM deflates the cuff and the blood starts to pass the restriction, the oscillation incline rapidly and the systolic (high) pressure is measured. When the oscillation has peaked and is declining rapidly, the diastolic (low) pressure is measured. The mean pressure is measured when the oscillation is peaking. The heart rate is determined by using the pressure oscillations measured by the pressure transducer. When to measure the diastolic pressure is determined by extensive experiments to establish an algorithm, which is included in the BPM software.

In the field it is possible to perform a check of the device to determine if it works or not. The device has to be sent to Gambro for repair in case of malfunction.

3.4.3.4 Single needle treatment

When the AK 98 dialysis machine is used for **single needle** treatment, the arterial and venous phases are pressure-controlled. Arterial blood is removed from the patient when the arterial line clamp is open, and the venous line clamp is closed.

The running time of the blood pump is determined by the venous pressure high limit. In this way, a positive pressure is created. In the next phase, the blood pump is stopped, the arterial line clamp is closed, and the venous line clamp is opened, i.e., the blood is returned to the patient by means of the positive pressure. The venous line clamp is then closed, the arterial line clamp is opened, the blood pump is started, and the procedure is repeated.

The expansion chamber evens out pressure pulsations.

3.4.4 BM component description

Blood line clamps

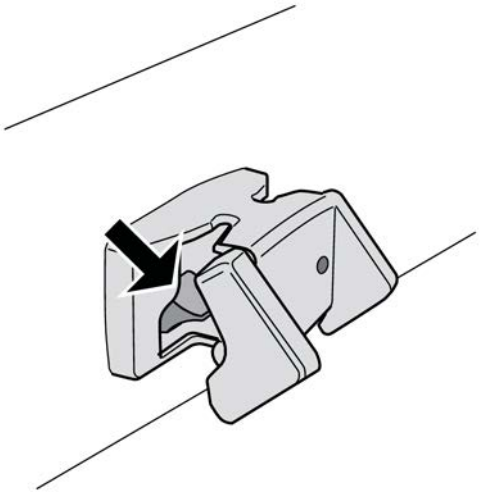

The blood unit includes two line clamps: an arterial line clamp and a venous line clamp.

The arterial line clamp is located to the right, and the venous line clamp is located to the left when viewed from the front. The clamp covers also have different colour markings: The arterial clamp cover is marked with a red dot, and the venous clamp cover is marked with a blue dot.

The line clamp unit consists of the following:

- Housing with covers (mounted on the front plate)
- 2 solenoids (as one unit)

- Line clamp driver board
- 2 clamp detectors

The line clamp driver board interfaces to the power I/O board, via a board connector and a flat cable.

Blood pump unit

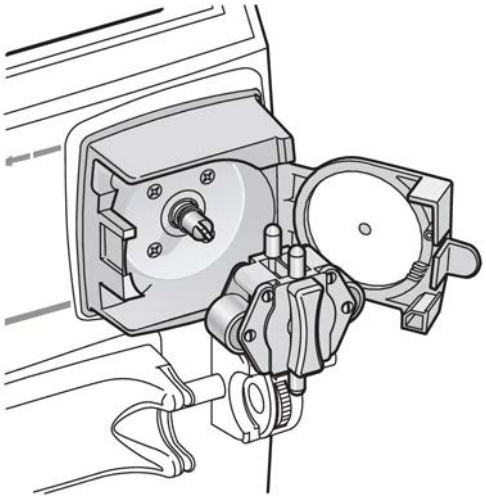

The blood pump unit consists of the following:

- Tube pump (self-threading).
- 24 V brushless DC motor with an encoder for velocity monitoring.
- Gear box (1:50).
- Cover detector.

The blood pump unit, except the tube pump, is mounted on the back of the front plate. The motor, cover detector and position board interface to the Front I/O board, via connectors and cables.

Heparin pump

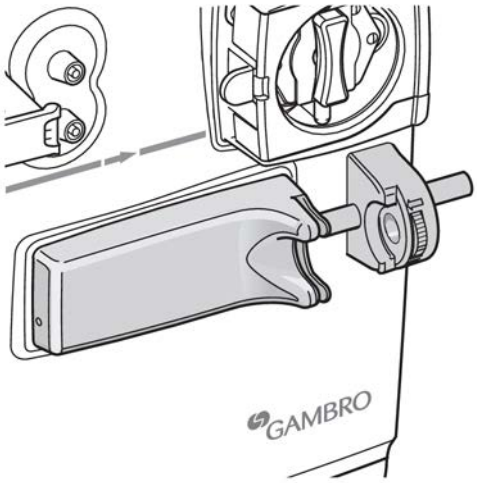

The heparin pump unit consists of the following components:

- Heparin pump. The inner diameter of the syringe can range between 10 to 30 mm
- Stepping motor
- Gear box (1:120)

- Heparin pump position board
- Heparin pump feedback potentiometer

The stepping motor, heparin pump position board and heparin pump potentiometer interface to the Front I/O board, via cables.

Venous pressure transducer (C+P)

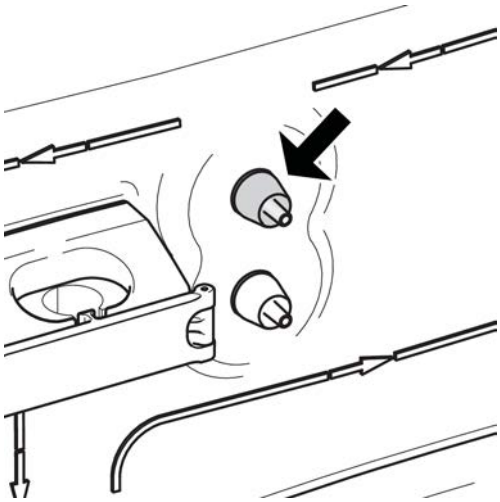

The blood unit is equipped with two pressure transducers connected to one port, which are used to measure the venous blood pressure. The pressure transducers are mounted on a pressure transducer board, which interfaces directly with the Front I/O board via a board connector. The pressure transducers are connected via a small tube to the venous pressure transducer nipple located on the front.

Arterial pressure transducer

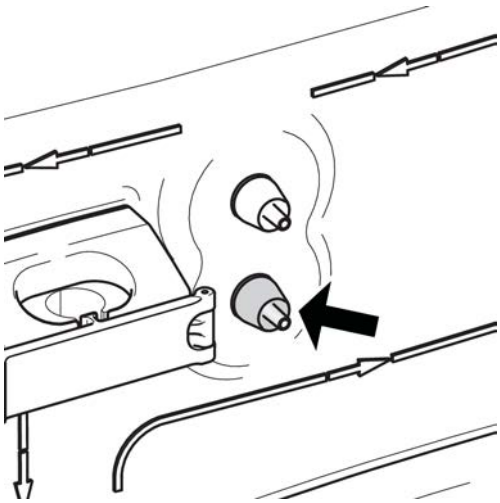

The AK 98 dialysis machine is equipped with a second pressure transducer named Arterial Pressure Transducer. This pressure will be displayed on the arterial bargraph. The transducer is used for the measurement of true arterial pressure. The pressure transducer is mounted on a pressure transducer board, which interfaces directly with the Front I/O board via a board connector.

Air detector

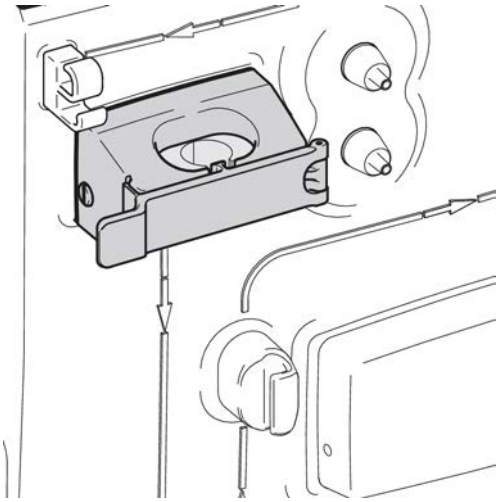

The air detector is an ultrasonic detector placed at the venous drip chamber holder. The air detector's receiving side is split into two identical channels leading to the Protective System and the Control System respectively. Both systems must "agree" about the signal (that it's OK).

The function of the detector is tested by the CPU's during the functional check.

Priming detector

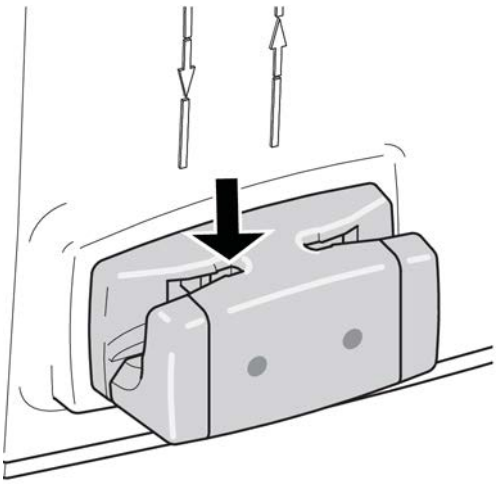

The priming detector is a two-channel device, with both control and protective systems agreeing about the signal.

The purpose of the priming detector is to facilitate priming by suppressing certain alarms when no blood is in the venous line. The control system outputs a pulse train to the transmitting side (an LED) of the priming detector head.

When blood is detected for more than 20 seconds, the control system and the protective system disconnect the priming detector function and keep the AK 98 dialysis machine in blood mode until the end of the treatment, i.e. when Time = 0:00 is confirmed. Confirmation is done by confirming the attention

```
596 Treatment time expired
To continue press Confirm.
```

When the monitor is out of blood mode, it is possible to enter a mode other than treatment mode.

BPM

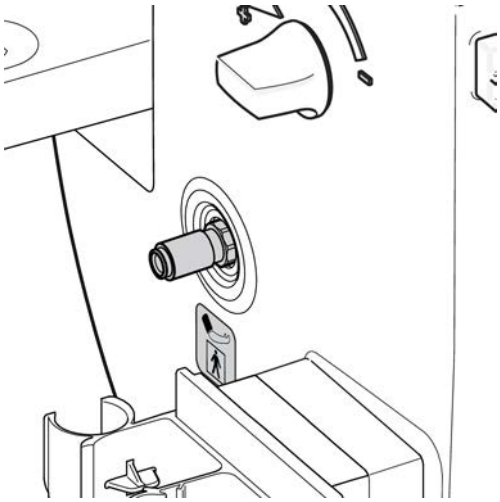

The BPM monitor is a measuring device that can issue attentions and alarms but the alarms will not interfere with the treatment.

The BPM module includes the following components: air pump, bleed valve, dump valve, pressure transducers (control and protective), and microprocessor board. The module includes control and protective systems.

3.5 Power supply

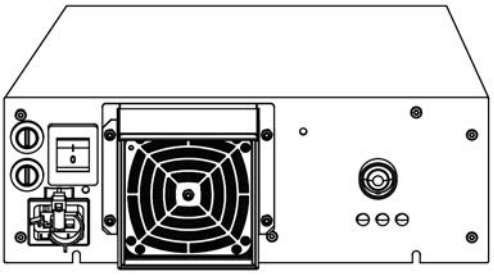

The AC/DC power supply is designed to operate between 85 V - 265 V mains voltage with a frequency of 50 Hz - 60 Hz.

The power supply generates +24 V and ±12 V.

+24 V is supplied by the AC/DC power supply and fed to an internal DC/DC converter; the converter produces ±12 V.

The ±12 V and +24 V supplies are monitored by the A/D converters in the Control System and the Protective System.

3.6 Operator's panel

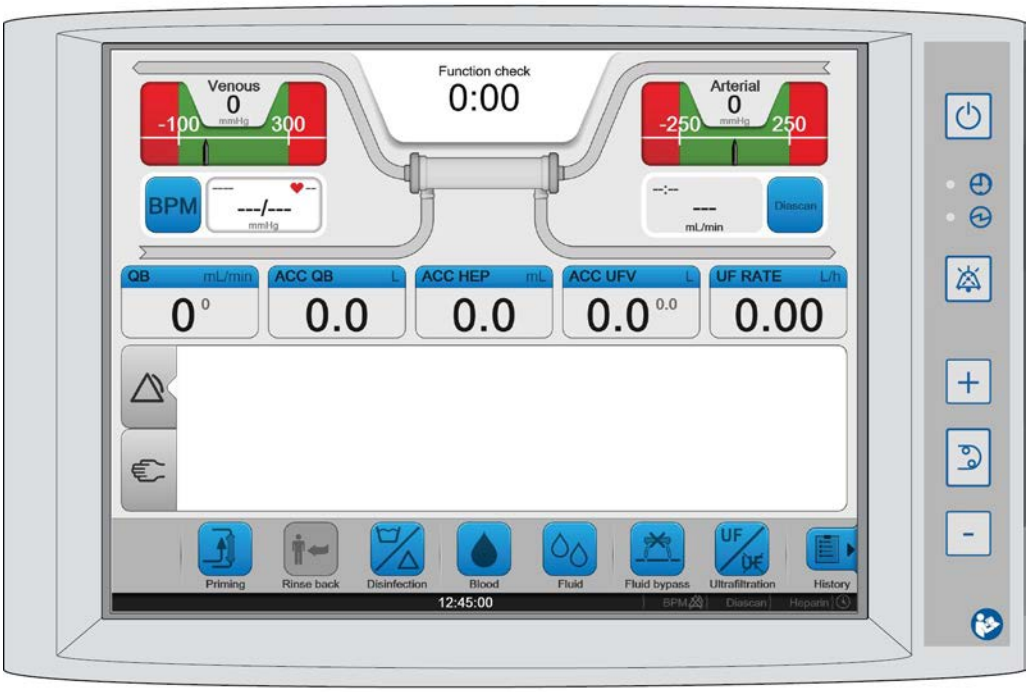

The operator's panel consists of

- a **touch panel**: used for activating/deactivating functions, starting/stopping procedures, and selecting options in addition to setting parameters and alarm limits. The Information field also displays parameter values during priming and treatment procedures. It displays alarm and attention messages and functions that are currently active.
- **buttons and indicators**: **On/Off** button, **Mute** button, **Blood pump** button, **Blood pump up**/**Blood pump down** buttons, power indicator, and schedule indicator.

! **NOTE!**
For detailed information about the operator's panel and its operation, refer to Chapter 3 Handling the dialysis machine in the AK 98 operator's manual.

This page is intentionally left blank.

4 Technical data and specifications

4.1 Performance and specification - Control System

4.1.1 Priming

The device is ready to prime within 45 seconds.

4.1.2 Blood flow control

Values for the blood pump are based on a pressure of -150 mmHg before the arterial blood pump with a pump segment diameter of 8.0 mm and 2.0 mm wall thickness. For paediatric blood lines with pump segment of 3.9 mm it is possible to set blood flow to 5, 10 or 15 mL/min. In the range 10 mL/min to 15 mL/min, and for a pre-pump pressure range from -200 mmHg to 100 mmHg, the accuracy is ±5 mL/min of the set point value.

Table 4-1. Double Needle

The blood flow is compensated for arterial pressure when the arterial blood line is connected.	
Flow rate	0 and 20 to 500 mL/min (-150 mmHg pre pump pressure, 0 to 500 mmHg post pump pressure, pump segment diameter 8.0 mm)
Flow accuracy	for pre-pump pressure range from -200 mmHg to +100 mmHg: ±10 mL/min or ±10 % of the set point value, whichever is the largest
Accumulated blood volume	0 - 327 litres
Volume accuracy	±0.6 L x treatment time (h) or ±10 %, whichever is the largest

Table 4-2. Single Needle

Arterial flow rate	0 and 20 to 500 mL/min (-400 mmHg to +300 mmHg pre pump pressure, 0 to 500 mmHg post pump pressure, pump segment diameter 8.0 mm)
Flow accuracy	for pre-pump pressure range from -200 mmHg to +100 mmHg: ±10 mL/min or ±10 % of the calculated mean value, whichever is the largest
Pressure control	10 to 500 mmHg (±50 mmHg), venous pressure control
Accumulated blood volume	0 - 327 litres
Volume accuracy	±0.6 L x treatment time (h) or ±10 %, whichever is the largest

4.1.3 Heparin pump

Table 4-3. Heparin pump specifications

Heparin pump flow rate	0 - 10 mL/h in step of 0.1 mL (±1 mL/5h or ±5 %). The accuracy is based on tests with 20 mL and 30 mL syringes with an inner diameter of 20 mm.
Heparin bolus flow rate	60 mL/h when a syringe with an inner diameter of 16 mm or larger is used. If a smaller syringe is used (inner diameter 10-15 mm), the flow rate can be lower.
Bolus volume	0 to 10 mL (±0.2 mL or ±5% whichever is largest, with blood lines primed)
Size	Syringes between 10-30 mL can be used. Syringes shall be compliant to ISO 7886-2 and have a luer lock.
Stop time	The heparin pump stops before end of treatment 0:00 to 9:59 h

Counter pressure	Maximum 400 mmHg
Accumulated volume	0 - 999.9 mL

4.1.4 Blood pressure

Table 4-4. Venous Pressure

Operating range	-700 to 750 mmHg
Alarm limits	10 to 500 mmHg in treatment mode -100 to 500 mmHg in priming mode
Accuracy	±10 % within range -700 to -500 mmHg ±5 mmHg or ±3 %, whichever is largest within range -500 to 500 mmHg ±10 % within range 500 to 750 mmHg

At 300 mL/min dialysis fluid flow maximum venous pressure during treatment is approximately 250 mmHg.

4.1.5 Blood pressure monitor (BPM)

Blood pressure monitoring is only available if the blood pressure monitor (option) is installed.

Rated range for cuff pressure during normal use	0 - 280 mmHg
Default inflation pressure for Gambro cuff	180 mmHg

The alarm limits below can be preset. The value put in brackets and in italics is the default value.

Systolic pressure range	40 - 260 mmHg
Low alarm limit	40 - 260 mmHg *(100 mmHg)*
High alarm limit	40 - 260 mmHg *(180 mmHg)*
Diastolic pressure range	20 - 200 mmHg
Low alarm limit	20 - 200 mmHg *(40 mmHg)*
High alarm limit	20 - 200 mmHg *(110 mmHg)*
Mean pressure range	26 - 220 mmHg
Low alarm limit	26 - 220 mmHg *(45 mmHg)*
High alarm limit	26 - 220 mmHg *(220 mmHg)*
Pulse rate range	30 - 220 bpm (±3 bpm or ±2 % of reading)
Low alarm limit	30 - 220 bpm *(40 bpm)*
High alarm limit	30 - 220 bpm *(130 bpm)*

4.1.6 Dialysis fluid preparation

Table 4-5. Pressure regulators

After pressure regulator PR1 and the heat exchangers	80 kPa (0.8 ±0.1 bar)
After pressure regulator PR2	130 ±10 mmHg

Table 4-6. Temperature

Temperature	Adjustable 33 to 40°C.
Accuracy	+0.5/-1.5°C (+1.0/-2.5°C with UFD) at the dialysis fluid outlet from the machine. Accuracy is valid only if dialysis fluid temperature is greater or equal to ambient temperature.
Alarm limits	Adjustable 32.5 to 40°C
Heater capacity	1300 W (+10 % / -5 %) at 115 V 3 X 580 W (+10 % / -5 %) at 230 V
Overheat protection	Reg-temperature 80°C or CondA-temperature 70°C in treatment, software Reg-temperature 99°C in disinfection, software The heater can only be on if there is a flow through the heater. The flow is detected by a flow switch.

Table 4-7. Flow rate

Dialysis Fluid Flow Rate	300 to 700 mL/min in steps of 20 mL/min
Accuracy	±10 % or 50 mL/min whichever is largest

Table 4-8. Degassing

By use of negative pressure, -610 mmHg. Adjustable degassing pressure between -300 and -700 mmHg (-650 mmHg with 700 mL/min flow rate).	
Accuracy	±40 mmHg

Table 4-9. Dialysis fluid pressure

Dialysis fluid pressure	-400 to +300 mmHg
Accuracy	±10 mmHg or ±5 % whichever is largest

Table 4-10. Proportioning of concentrates

The proportioning of concentrate is done through conductivity control. The concentrates are pumped into the system with one/two volumetrically supervised pumps. No minimum feeding pressure is necessary, the fluid is sucked in. Maximum feeding pressure, 50 kPa.	
Bicarbonate	Na^+, 130 to 150 mmol/L HCO_3^-, 20 to 40 mmol/L
Measuring range	9 to 16 mS/cm
Accuracy	0.2 mS/cm
Alarm limits	±5 % of the calculated conductivity set value

4.1.7 Ultrafiltration control

Precise pre- and post-treatment weight is critical for adequate assessment of the ultrafiltration during the treatment. If these measurements are not accurate a discrepancy between the ultrafiltration achieved during the treatment and the changes in body weight will occur. Besides the ultrafiltration, patient weight change during treatment is also affected by other factors. These include factors such as fluid intake, food intake, perspiration, drug administration, infusion priming and rinse-back volumes amongst others.

The technical working principle was evaluated by comparing the weight change of the patient using a personal scale.

Volume control	Direct electromagnetic measurement of dialysis fluid flow, before and after the dialyzer.
UF volume	Adjustable 0 to 10.00 L
Accuracy of measured volume	±50 mL or ±50 mL/h x passed treatment time (h) or ±2.5 % of the accumulated UF volume, whichever is largest.
UF coefficient	Maximum 85 mL/h/mmHg
UF-rate	0.0 to 4.0 L/h, given by the set values of UF volume and treatment time.
Time	Remaining treatment time control. 0:00 to 9:59 hour:minute (±2 minutes or ±1% whichever is the largest)

4.1.8 Ultrafiltration protective

Table 4-11.

Accuracy of measured volume	±85 mL or ±85 mL/h x passed treatment time (h).
UF-rate	0.0 to 4.0 L/h, given by the set values of UF volume and treatment time.

4.1.9 Profiling

Table 4-12.

UF-rate	0.0 to 4.0 L/h
Na^+, Bicarbonate mode	130 to 150 mmol/L
HCO_3^-, Bicarbonate mode	20 to 40 mmol/L

4.1.10 Diascan™ (option)

Clearance measurement is only available if the Diascan clearance sensor (option) is installed. During UF step and interval profiling, Diascan measurement is not available. The specification is based on in vitro measurements with saline.

Clearance K typical precision	±8% (±1SD). Precision has been validated in HD double needle, for blood flows 200 to 400 mL/min and fluid flows 500 to 700 mL/min.
Cumulated water volume cleared of Kt	0 to 100 L (±6% (±1SD, based on 7 measurements)
Dialysis dose Kt/V	0 to 3
Measurement interval	30 or 60 minutes

4.1.11 Disinfection and cleaning – chemical disinfection

Total time for disinfection programs is estimated and may vary.

Table 4-13. Peracetic Acid Program (presettable)

Concentration of disinfectant	3.5 % peracetic acid
Concentration in machine	0.1 %; i.e. diluted 1 + 34 (1:35)
Volume	Approx. 97 ml (with UFD approx. 122ml)
Contact time between treatments	10 minutes
Contact time overnight or when not in use (recommended with UFD)	Minimum 3 h dwell time
Total time	30 minutes (230 V and 115 V) 59 minutes (230 V) with UFD 65 minutes (115 V) with UFD Time includes 10 min contact time

Table 4-14. Hypochlorite Program (presettable)

Concentration of disinfectant	10 % available chlorine
Concentration in machine	0.5 %; i.e. diluted 1 + 19 (1:20)
Volume	Approx. 155 ml (with UFD approx. 163 ml)
Contact time between treatments	10 minutes
Contact time	Maximum 20 min, not intended for overnight disinfection!
Total time	29 minutes 50 minutes with UFD Time includes 10 min contact time

4.1.12 Disinfection and cleaning - heat disinfection

Temperature:	93 °C (measured after heating rod) ≥80 °C (measured in the outlet before the heat exchanger)

! **NOTE!**
The temperatures are verified at nominal values for the mains voltage and at 20 °C ambient temperature.

Total time for disinfection programs is estimated and may vary.

One of four alternatives for heat disinfection can be selected. The second and third alternatives are presettable for a combined heating program and the fourth is a CleanCart cartridge disinfection / heating program alternative.

The default settings are as follows:

AK 98	Disinfection programs	Total Time (min)	
		230 V	115 V
With UFD	Heat	34	40
	Heat Citric acid 20 %	50	54
	Short Heat Citric acid 20 %	25	27
	Heat and CleanCart cartridge	47	51
Without UFD	Heat	31	36
	Heat Citric acid 20 %	46	51
	Short Heat Citric acid 20 %	25	27
	Heat and CleanCart cartridge	43	48

4.1.13 Auto heat disinfection

Auto heat disinfection is used with or without CleanCart agents. When auto heat disinfection is performed with a CleanCart cartridge agent, the cartridge shall be installed before start of the auto heat program.

Total time for disinfection programs is estimated and may vary.

AK 98	Disinfection programs	Total Time (min)	
		230 V	115 V
With UFD	Heat	29	35
	Heat and CleanCart cartridge	42	46
Without UFD	Heat	29	34
	Heat and CleanCart cartridge	41	46

4.1.14 Heat disinfection program including WRO 300 H

Table 4-15. Heat disinfection program including WRO 300 H

Entity	UFD not installed	UFD installed (option)
Temperature	93 °C	93 °C
Fill up phase	10	13
Circulation phase	15	15
Low flow heat phase	20	20
Drain phase	4	4
Total time	49	52

Drain phase follows after low flow heat phase. WRO 300 H will start heat disinfection simultaneously (if preset, see WRO 300 H service manual).

4.1.15 Disinfection and cleaning – rinse/drain

Total time for disinfection programs is estimated and may vary.

Rinse/Drain	10 minutes
Drain	4 minutes

4.1.16 Disinfection and cleaning – exterior cleaning

All outside parts of the machine can be cleaned with ethanol (70 %) or isopropanol (60 %).

4.1.17 Water supply

WARNING!
To ensure the quality of the dialysis fluid, inlet water quality shall comply with appropriate regulations and as a minimum requirement according to ISO 13959.

Flow rate	During treatment: maximum 770 mL/min During disinfection and rinse/drain: a maximum flow rate of 800 mL/min is required.
Minimum inlet pressure	0.12 MPa (1.2 bar)
Maximum inlet pressure	0.6 MPa (6 bar)
Inlet temperature	Treatment: +5 to +30 ºC Disinfection: +5 to +90 ºC
Connector in/outlet	Diameter 8 mm
Quality	Inlet water quality shall comply with appropriate regulations and as a minimum requirement according to ISO 13959. Level for conductivity shall not exceed 0.1mS/cm. It is possible to use water with higher conductivity if it consists mainly of sodium salts. This may however affect the accuracy of the fluid composition. **NOTE!** Local regulations may require the use of separation devices in the supply and special measures to protect against the possibility of back-syphonage from dialysis equipment into the water supply.
Drain	The drain tube outlet shall be placed between floor level and maximum 1.2m above the outlet connection from the fluid monitor. An air gap to atmospheric pressure must always be arranged at the tube outlet. Maximum temperature which can occur at the drain is 90 ºC.
Length of drain tube	≤10 m
High pressure guard transducer	±500 mmHg, (±10 mmHg or ±5 %, whichever is largest)
Inlet pressure switch (INPS)	Increasing: +150 mmHg, ±20 mmHg Decreasing: +99 mmHg, ±20 mmHg
Safety guard switch (SAGS)	Increasing: -59 mmHg, ±7 mmHg Decreasing: -74 mmHg, ±7 mmHg

4.1.18 Power supply

Mains voltage	115 V AC, 50 Hz 115 V AC, 60 Hz 230 V AC, 50 Hz 230 V AC, 60 Hz The voltage has to be specified before installation. A qualified electrician shall verify the quality of the protective earth in the installation.
Protection class	Machine: Class 1 type B BPM: Type BF
Power consumption	Max. 2025 W at 230 V Max. 1575 W at 115 V
Cable	3 conductor cable, Length max. 3.5 m Ratings: 230 - 250 V AC 10 A or 110 - 125 V AC 15 A
External fuses	For 115 V AC, 2 x T15AH for heater. For 230 V AC, 2 x T10AH for heater.
Mains plug	Earthed plug, 250 V AC / 10 A, approved or Hospital grade, earthed plug, 125 V AC / 15 A, approved.
Earth leakage current	max 500 µA
Patient leakage current	max 100 µA AC max 10 µA DC

All leakage currents specified are without external equipment connected to the AK 98 dialysis machine.

4.1.19 Connection of external equipment

External connector	To communicate via the external connector 25 pin D-Sub as USB, a virtual COM port driver (VCD) needs to be installed on your PC.

External equipment

Additional equipment connected to medical electrical equipment shall comply with the respective IEC or ISO standards (e.g. IEC 60950 for data processing equipment).

Furthermore all configurations shall comply with the requirements for medical electrical systems (see clause 16 of IEC 60601-1).

Anybody connecting additional equipment to medical electrical equipment configures a medical system and is therefore responsible that the system complies with the requirements for medical electrical systems. Attention is drawn to the fact that local laws take priority over the above mentioned requirements. If in doubt, consult your local **Gambro Service representative** or the technical service department.

Table 4-16. External alarm

Max voltage	24 V AC or DC
Max current	100 mA AC or DC
Max delay time	100 ms

USB type	USB 2.0 mass storage device

Table 4-17. RS-232C

Max input voltage	± 15 V DC
High level min output voltage	5.0 V DC
Low level max output voltage	- 5.0 V DC
Max output current	± 5 mA DC

4.1.20 Battery back-up

Table 4-18.

Battery back-up of power supply	24 V, 7.0 Ah
Battery type	Sealed Lead Acid, 2 x 12 V
Running time	>15 minutes
Fuse	T12AH

4.2 Performance and specification - Supervisory system

4.2.1 Blood pressure supervision

Table 4-19. Venous pressure

Operating range	-700 to +750 mmHg
Alarm limits, in treatment mode	10 to 500 mmHg
Alarm limits, in priming mode	-100 to 500 mmHg
Accuracy	±10 % within range -700 to -500 mmHg ±5 mmHg or ±3 %, whichever is largest within range -500 to 500 mmHg ±10 % within range 500 to 750 mmHg

Table 4-20. Arterial pressure

Operating range	-700 to +750 mmHg
Alarm limits	-400 to +300 mmHg
Accuracy	±10 % within range -700 to -500 mmHg ±5 mmHg or ±3 %, whichever is largest within range -500 to 500 mmHg ±10 % within range 500 to 750 mmHg

Table 4-21. Extracorporeal blood loss to the environment

Detection method	Venous pressure supervision

4.2.2 Air detection

Detection method	Ultrasonic detector placed at the venous drip chamber. The detector has a two-channel structure and the function of the detector is tested at the function test made by the microcomputers.
Drip chamber size	Diameter 22 mm
Sensitivity	Bubbles larger than 1 µl will be trapped by the drip chamber. An alarm will be issued if the blood level falls below the middle of the air detector.

4.2.3 Extracorporeal blood loss due to coagulation

Detection method	Supervision of the stop time of the blood pump. The default alarm limit is 60 seconds.
Alarm	The alarm

```
107 Blood pump is stopped for too long
```

4.2.4 Dialysis fluid preparation

Table 4-22. Temperature

High temperature alarm (fixed)	40 °C (±0.5 °C)
Low temperature alarm (fixed)	32.5 °C (±0.5 °C)
Overheat protection	The heater can only be on if there is a flow through the heater. The flow is detected by a flow switch.

Table 4-23. Conductivity

Alarm limits	Error in the preparation of the dialysis fluid may lead to conductivity alarms. The maximum possible deviation of each ion before a conductivity alarm is issued, given the default settings of the alarm presets, is ±5% for sodium ion, ±20% for bicarbonate ion and ±2.5% for other ions.
Accuracy	0.2 mS/cm

4.2.5 TMP

TMP	TMP is defined as the difference, $P_{b\ out}$ - $P_{d\ out}$, where $P_{b\ out}$ is the venous pressure and $P_{d\ out}$ is the pressure measured in the dialysis fluid, where it enters the machine after the dialyzer. The displayed TMP value is compensated for vertical difference between the measure points.
Alarm limits	-100 to 500 mmHg
Accuracy	±10 mmHg or ±5 %, whichever is largest (within range ±500 mmHg)

4.2.6 Blood leakage detection

Detection method	Infrared light detector.
Sensitivity	Alarm will be given for ≥0.3 mL blood, hematocrit 32 %, per minute at 300-700mL/min dialysis fluid flow. Time delay for alarm, maximum 5 seconds (diffusion mode).

4.3 Alarm sound pressure

4.3.1 Alarm sound pressure

The alarm sound pressure is presetable to minimum 55 dB (A) and maximum 85 dB (A). The default preset is 65 dB (A).

4.4 Physical data

4.4.1 Dimensions and weight

Width; machine	Approx. 345 mm
Width; stand	Approx. 585 mm
Depth; machine	Approx. 600 mm
Depth; stand	Approx. 620 mm
Height	Approx. 1305 mm (without infusion stand).
Weight	Approx. 70 kg (without options).

4.4.2 Infusion stand

Table 4-24.

Maximum total load	3 kg

4.5 Materials in contact with dialysis fluid, concentrates, and water

4.5.1 Polymers

Silicon rubber
Nitrile (Nitrile butadiene rubber)
EPDM (Ethylene propylene diene)
PA (Polyamide)
PVC (Polyvinyl chloride)
PEEK (Polyetherketone)
PEX (Polyethylene)
PP (Polypropylene)
PPSU (Polyphenylsulfone)
PSU (Polysulphone)
PVDF (Polyvinylidene fluoride)
PTFE (Polytetrafluoro ethylene)
PPE/PS (Polyphenyl ether/Polystyrene)

4.5.2 Metals

Stainless steel EN 1.4435
Stainless steel EN 1.4436
Stainless steel EN 1.4539
Titanium

Platinum

HASTELLOY C-22

4.5.3 Other materials

Carbon

Ceramic, Aluminium oxide (Al2O3)

Glass

4.6 Environmental data

4.6.1 Operation

If condensation occur when moving the equipment between locations with different temperatures and high relative humidity (e.g. outdoor and indoor locations), the inside of the equipment shall be allowed to dry before switching on the equipment.

Table 4-25.

Ambient Temperature range	+18 to +35 °C
Relative Humidity range	15 to 85 % RH
Air Pressure range (atm. pressure)	700 to 1060 hPa

4.6.2 Transportation and storage

It is recommended that the equipment is kept in its original packing during transportation and storage.

Ambient Temperature range	-20 to +70 °C
Relative Humidity range	10 to 80 % RH
Air Pressure range (atm. pressure)	500 to 1060 hPa

4.6.3 Electromagnetic environment

The AK 98 dialysis machine is intended for use in the electromagnetic environment specified below. The customer or the user of the AK 98 dialysis machine should assure that it is used in such an environment.

Emissions test	Compliance	Electromagnetic environment – guidance
RF emissions CISPR 11	Group 1	The AK 98 dialysis machine uses RF energy only for its internal function. Therefore, its RF emissions are very low and are not likely to cause any interference in nearby electronic equipment.
RF emissions CISPR 11	Class B	The AK 98 dialysis machine is suitable for use in all establishments, including domestic establishments and those directly connected to the public low-voltage power supply network that supplies buildings used for domestic purposes.
Harmonic emissions IEC 61000-3-2	Class A (Not applicable for 115 V version)	-
Voltage fluctuations / flicker emissions IEC 61000-3-3	Complies (Not applicable for 115 V version)	-

Immunity test	IEC 60601 test level	Compliance level	Electromagnetic enviroment-guidance
Electrostatic discharge (ESD), IEC 61000-4-2	±6 kV contact ±8 kV Air	±6 kV contact ±8 kV Air	Floors should be wood, concrete or ceramic tile. If floors are covered with synthetic material, the relative humidity should be at least 30 %.
Electrical fast transient/burst, IEC 61000-4-4	±2 kV for power lines	±2 kV for power lines	Mains power quality should be that of a typical commercial or hospital environment.
Surge IEC 61000-4-5	±1kV for differential mode ±2kV for common mode	±1kV for differential mode ±2kV for common mode	Mains power quality should be that of a typical commercial or hospital environment
Voltage dips, short interruptions and voltage variations on power supply input lines. IEC 61000-4-11	<5 % U_T(>95 % dip in U_T) for 0,5 cycle 40 % U_T(60 % dip in U_T) for 5 cycles 70 % U_T (30 % dip in U_T) for 25 cycles <5 % U_T (>95 % dip in U_T) for 5 sec	<5 % U_T(>95 % dip in U_T) for 0,5 cycle 40 % U_T (60 % dip in U_T)for 5 cycles 70 % U_T (30 % dip in U_T)for 25 cycles <5 % U_T(>95 % dip in U_T) for 5 sec	Mains power quality should be that of a typical commercial or hospital environment. If the user of the AK 98 dialysis machine requires continued operation during power mains interruptions, it is recommended that the AK 98 dialysis machine be powered from an uninterruptible power supply or a battery.
Power frequency (50/60 Hz) magnetic field IEC 61000-4-8	3 A/m	3 V/m	Power frequency magnetic fields should be at levels characteristic of a typical location in a typical commercial or hospital environment.

NOTE!
UT is the a.c. mains voltage prior to application of the test level.

Immunity test	IEC 60601 test level	Compliance level	Electromagnetic enviroment-guidance
-	-	-	Portable and mobile RF communications equipment should be used no closer to any part of the AK 98 dialysis machine, including cables, than the recommended separation distance calculated from the equation applicable to the frequency of the transmitter.
-	-	-	**Recommended separation distance**
Conducted RF IEC 61000-4-6	3 Vrms 150 kHz to 80 MHz	3 V	$d = 1.2\sqrt{P}$
Radiated RF IEC 61000-4-3	3 V/m 80 MHz to 2,5 GHz	3 V/m	$d = 1.2\sqrt{P}$ 80 MHz to 800 $d = 2.3\sqrt{P}$ 800 MHz to 2.5 GHz
Radiated RF mobile phones-	-	30 V/m	Where P is the maximum output power rating of the transmitter in watts (W) according to the transmitter manufacturer and d is the recommended separation distance in meters (m). Field strengths from fixed RF transmitters, as determined by an electromagnetic site survey[a], should be less than the compliance level in each frequency range[b]. Interference may occur in the vicinity of equipment marked with the following symbol:

[a] Field strengths from fixed transmitters, such as base stations for radio (cellular/cordless) telephones and land mobile radios, amateur radio, AM and FM radio broadcast and TV broadcast cannot be predicted theoretically with accuracy. To assess the electromagnetic environment due to fixed RF transmitters, an electromagnetic site survey should be considered. If the measured field strength in the location in which the AK 98 dialysis machine is used exceeds the applicable RF compliance level above, the AK 98 dialysis machine should be observed to verify normal operation. If abnormal performance is observed, additional measures may be necessary, such as reorienting or relocating the AK 98 dialysis machine.
[b] Over the frequency range 150 kHz to 80 MHz, field strengths should be less than 3 V/m.

NOTE!
At 80 MHz and 800 MHz, the higher frequency range applies.

NOTE!
These guidelines may not apply in all situations. Electromagnetic propagation is affected by absorption and reflection from structures, objects and people.

Recommended separation distances between portable and mobile RF communications equipment and the AK 98 dialysis machine			
The AK 98 dialysis machine is intended for use in an electromagnetic environment in which radiated RF disturbances are controlled. The customer or the user of the AK 98 dialysis machine can help prevent electromagnetic interference by maintaining a minimum distance between portable and mobile RF communications equipment (transmitters) and the AK 98 dialysis machine as recommended below, according to the maximum output power of the communications equipment.			
Rated maximum output power of transmitter W	**Separation distance according to frequency of transmitter(m)**		
	150kHz - 80MHz $d = \left[\frac{3,5}{3}\right]\sqrt{P}$	**80MHz - 800MHz** $d = \left[\frac{3,5}{3}\right]\sqrt{P}$	**800MHz - 2500MHz** $d = \left[\frac{7}{3}\right]\sqrt{P}$
0,01	0.11	0.11	0.23
0,1	0.37	0.37	0.74
1	1.2	1.2	2.3
10	3.7	3.7	7.4
100	12	12	23
Rated maximum output power of mobile phone	-	-	$d = \left[\frac{7}{3}\right]\sqrt{P}$
2WGSM/3G	-	-	0.33
For transmitters rated at a maximum output power not listed above, the recommended separation distance **d** in meters (m) can be estimated using the equation applicable to the frequency of the transmitter, where **P** is the maximum output power rating of the transmitter in watts (W) according to the transmitter manufacturer.			

NOTE!
At 80 MHz and 800 MHz, the separation distance for the higher frequency range applies.

NOTE!
These guidelines may not apply in all situations. Electromagnetic propagation is affected by absorption and reflection from structures, objects and people.

4.6.4 Expected service life

Table 4-26. Expected service life

AK 98 dialysis machine	10 years
BPM cuff	2 years

4.6.5 Energy consumption

Typical energy consumption and energy delivery to environment and drain at inlet water temperature of approximately 23 °C given the conditions stated in Table 4-29 “Consumption conditions” on page 119.

Table 4-27. Energy consumption

Energy consumption	2.2 kWh
Energy delivery to the environment	1.3 kWh
Energy delivery to the drain	0.9 kWh

Typical consumption of water and dialysis fluid concentrates given the conditions stated in Table 4-29 "Consumption conditions" on page 119.

Table 4-28. Consumption of water and dialysis fluid concentrates

Water	140 L
A concentrate	2.9 L
B concentrate, liquid	5.0 L
B concentrate, dry powder	0.4 kg

Data in Table 4-27 "Energy consumption" on page 119 and Table 4-28 "Consumption of water and dialysis fluid concentrates" on page 119 have been obtained given the conditions stated in this table.

Table 4-29. Consumption conditions

Dialysing time	4h plus preparation time and post treatment operation
Dialysis fluid flow	500 mL/min
Blood flow	300 mL/min
Ultrafiltration flow	0,5 L/h
Dialysis fluid temperature	37 °C
Type of disinfection	Heat disinfection with CleanCart-C

4.7 Standards

The machine complies with the following standards:

IEC 60601-1:2005 + AM1:2012 Medical electrical equipment -- Part 1: General requirements for basic safety and essential performance.

IEC 60601-1-2:2007 Medical electrical equipment -- Part 1-2: General requirements for basic safety and essential performance - Collateral standard: Electromagnetic compatibility - Requirements and tests.

IEC 60601-1-6:2010 Medical electrical equipment -- Part 1-6: General requirements for basic safety and essential performance - Collateral Standard: Usability.

IEC 60601-1-8:2006 + AM1:2012 Medical electrical equipment -- Part 1-8: General requirements for basic safety and essential performance - Collateral Standard: General requirements, tests and guidance for alarm systems in medical electrical equipment and medical electrical systems.

IEC 60601-1-11:2010 + Cor 1:2011 Medical electrical equipment -- Part 1-11: General requirements for basic safety and essential performance - Collateral standard: Requirements for medical electrical equipment and medical electrical systems used in the home healthcare environment.

IEC 60601-2-16:2012 Medical electrical equipment - Part 2-16: Particular requirements for basic safety and essential performance of haemodialysis, haemodiafiltration and haemofiltration equipment.

IEC 80601-2-30 Medical Electrical Equipment - Part 2-30: Particular requirements for basic safety and essential performance of automated non-invasive sphygmomanometers. Ed.1 2009.

CAN/CSA-C22.2 No. 60601-1:08 Medical Electrical Equipment - Part 1: General Requirements for Basic Safety and Essential Performance (Adopted IEC 60601-1:2005, third edition, 2005-12, including corrigendum 1:2006, and with Canadian deviations).

IEC 62304:2006 Medical device software - Software life cycle processes.

IEC 62353:2007 Medical electrical equipment - Recurrent test and test after repair of medical electrical equipment.

YY 0054-2010 Haemodialysis Equipment (Medical industry standard in the People's Republic of China).

GB9706.1-2007 Medical Electrical Equipment - Part 1: General Requirements for Safety. (National standard in the People's Republic of China).

GB9706.2-2003 Medical Electrical Equipment - Part 2-16: Particular requirements for safety of haemodialysis, haemodiafiltration and haemofiltration equipment. (National standard in the People's Republic of China).

YY 0709-2009 Medical electrical equipment-Part 1-8: General requirements for safety-Collateral standard: General requirements, tests and guidance for alarm systems in medical electrical equipment and medical electrical systems. (Medical industry standard in the People's Republic of China).

YY 0505-2012 Medical Electrical Equipment - Part 1-2: General Requirements for Safety. Collateral Standard: Electromagnetic Compatibility - Requirements and Tests. (Medical industry standard in the People's Republic of China).

YY 0667-2008 Medical Electrical Equipment - Part 2-30: Particular requirements for the safety including essential performance of automatic cycling non-invasive blood pressure monitoring equipment. (Medical industry standard in the People's Republic of China).

GB/T 26125-2011 Testing Methods for Hazardous Substances in Electronic Information Products.

GB/T 26572-2011 Requirements of Concentration Limits for Certain Restricted Substances in Electrical and Electronic Products. (National standard in the People's Republic of China).

SJ/T11364-2006 Marking for Control of Pollution Caused by Electronic Information Products.

EN 1041:2008 Information supplied by the manufacturer of medical devices.

SFDA Order no.10 : Order of the State Food and Drug Administration; Administrative Regulations on Medical Device Instructions for Use, Labels and Marking of Packaging 2004-07.

5 Maintenance support

5.1 Service menu

5.1.1 About the service menu

The Service menu is intended to be used by qualified service engineers when performing different service-related procedures of the machine. It is possible to:

- Calibrate the screen
- Adjust the volume
- Perform logging of different parameters when troubleshooting the machine
- Check error codes
- Check installed features
- Check the program version
- Check the total number of hours the machine has run
- Enter Service/Preset-mode (via an access code)

5.1.2 Access the service menu

The Service menu is accessed through the `Blood` button.

Procedure

1) Press the `Blood` button.
2) Select the `Tools` tab.
3) Press `Service`.

5.1.3 Enter service or preset mode

NOTE!
Only service engineers fulfilling the minimum level of competence, according to AK 98 service manual, Section 1.7 "Competence of an authorised service technician" on page 13, are allowed to use Service and Preset mode to repair or maintain AK 98 dialysis machines.

NOTE!
The access code to Service and Preset mode is available from your local **Gambro Service representative**.

Procedure

1) Access the Service menu, see Section 5.1.2 "Access the service menu" on page 123.

2) Press `Service` or `Preset`, depending on what you need to do.

3) Enter the access code.

4) Press `OK`.

5.2 Main mode

5.2.1 Main mode overwiew

5.2.1.1 Machine

The machine tab contains information and general settings for the installed software and the screen.

- Set time
- Screen brightness
- Volume

5.2.1.2 Error list

The Error list tab contains a list of the errors that have appeared.

5.2.1.3 Installed features

The Installed features tab shows the installed options and software versions.

5.2.1.4 Logging

Logging means to read a value over a period of time.

In `Logging` mode the service engineer can check the condition and the status of the machine hardware and the software.

Logged values are displayed under the Logging tab in the Information field.

5.2.2 Logging

5.2.2.1 Fluid unit

Fluid unit flow path with logging variables.

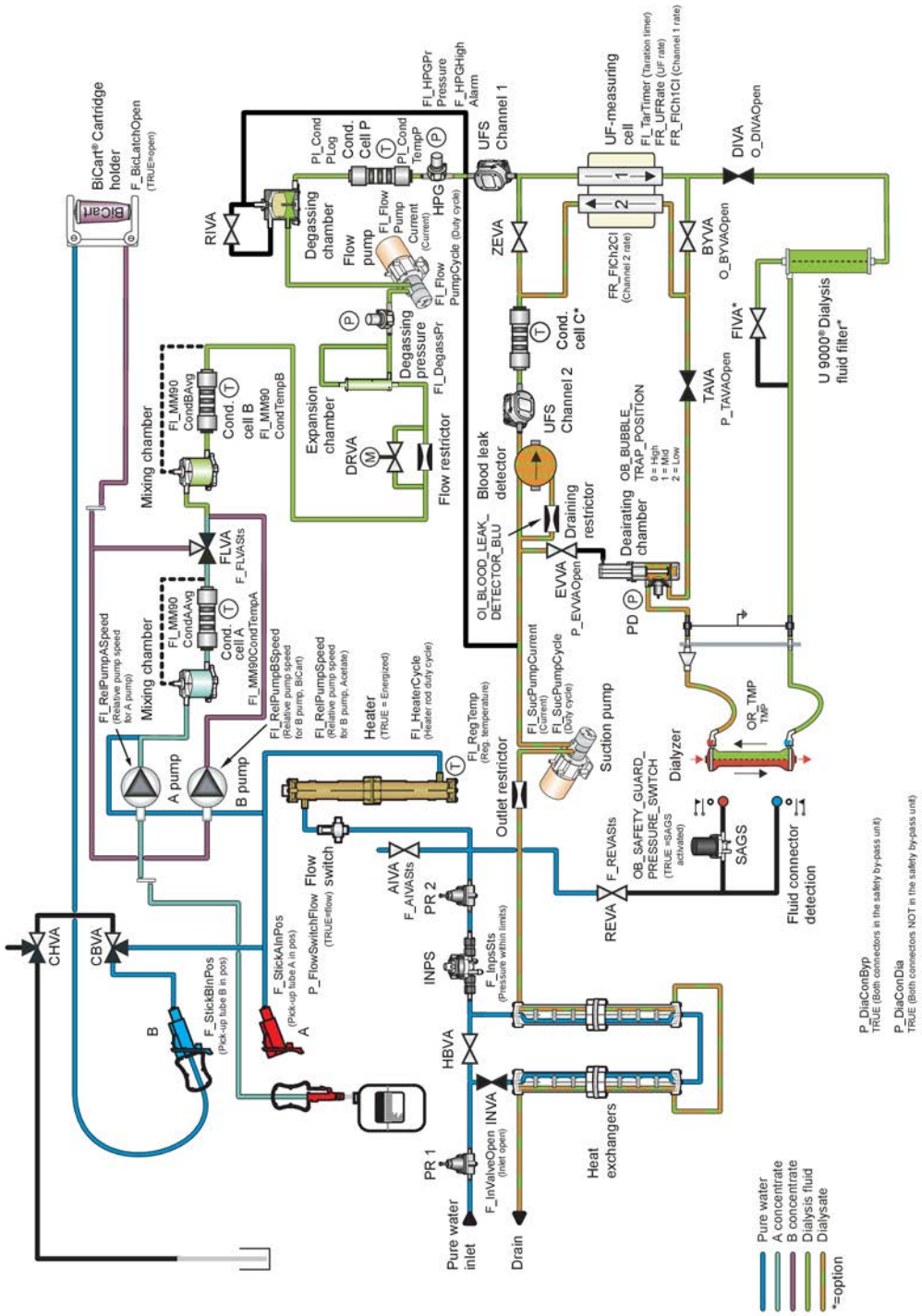

5.2.2.2 To display logging parameters

Procedure

1) Access the `Service menu`, see Section 5.1.2 “Access the service menu” on page 123.
2) Select the `Logging` tab.
3) Select a `Logging` parameter.
4) Enter the variable (For examle OF_KeyBoard, OB_LogSel1, OI_BicarbC11, etc.) to be displayed or its corresponding number. See the list of variables in the “Error Codes and Service Logging List” document.
5) Press `OK`.
6) Select a Resolution.
7) Press `Confirm`.
8) Select `Visibility` on (to display the values in the Information field).
9) Exit `Blood Menu`.
10) Select `Logging` tab in the Information field.

5.3 Preset mode

5.3.1 Preset mode overview

5.3.1.1 Presets

The Preset mode allows the service engineer to customise the machine upon each clinic’s special requirements.

This means, e.g. setting specific start up conditions and parameter limits, and setting up the machine to run on the clinic’s concentrates: concentrate presetting.

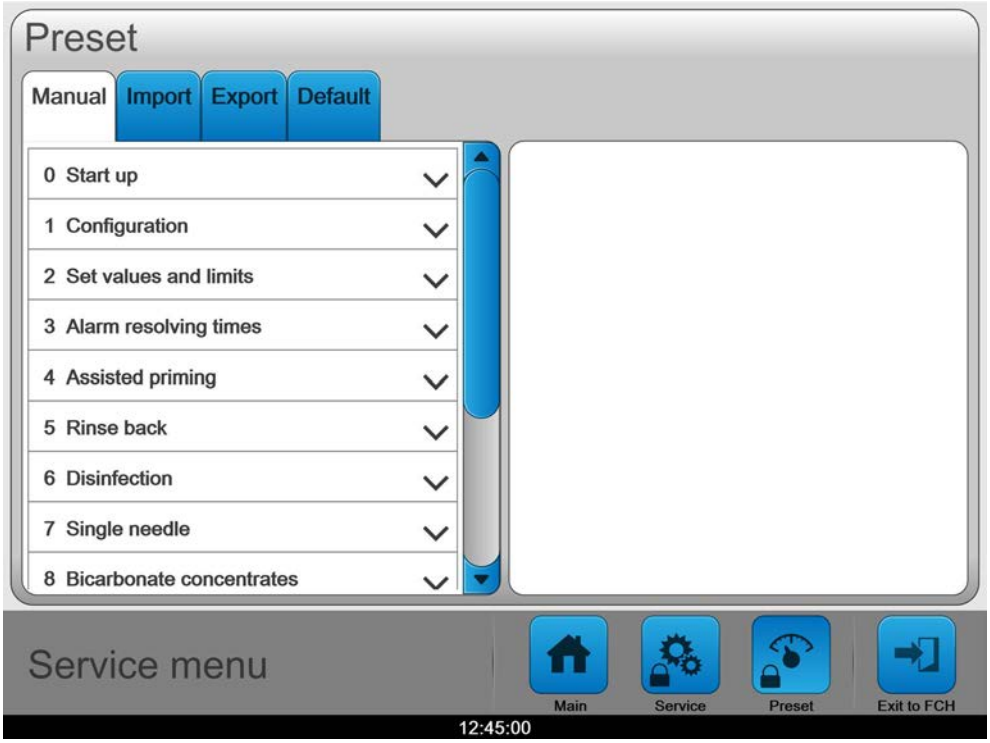

- `Manual`: The AK 98 dialysis machine can be preset directly from the operator's panel. Refer to Section 5.3.2.1 “To do a manual preset” on page 128.
- `Import`: Preset files can be imported to the machine from a USB flash drive.
- `Export`: Preset files can be exported from the machine to a USB flash drive.
- `Default`: The presets can be initiated to default values. Due to this will erase all customized presets on the machine, this should be handled with greatest care. Refer to Section 5.3.4 “Default preset” on page 130.

NOTE!
All preset values and limits shall be verified before treatment start.

NOTE!
Preset concentrates shall be verified by laboratory test of the dialysis fluid produced by the AK 98 dialysis machine.

NOTE!
Preset for pump segments shall be verified by comparing the pumped volume and a reference volume.

5.3.1.2 Preset parameter list

The preset parameters correspond to the program version installed on the machine.

A complete "Preset parameter list" including all presettable parameters, is available via the Gambro Service organisation.

The default values (minimum and maximum values for all preset parameters) are available in the list.

5.3.1.3 Presets variables

For the majority of the preset variables there is only one value specified. The rest of the preset variables have two or three values specified.

Examples:

- One value, e.g. “Arterial Phase time”.
- Two variables, e.g. “Arterial pressure”: “Low Limit” and “High Limit”.
- Three variables, e.g. “Temperature”: “Low Limit”, “Set” and “High Limit”.

Preset variables, basic data types:

- Selections, e.g. different languages such as “English“ and “French“ , or heater efficiencies such as “230 V (3x580 W)“ or “115 V (1300 W)“.
- Numerical values, such as “20.0 mm“.
- Text labels, such as “C295 + BiCart“.
- Time, expressed as HH:MM where HH is hours and MM is minutes such as “Dwell time“.

  For some of the preset variables the minimum value (in the possible range) corresponds to “Off“ and/or the maximum value corresponds to “Forever“.
- Mixing ratios of concentrates, such as “1+34“.

5.3.2 Manual preset

5.3.2.1 To do a manual preset

Procedure

1) Enter Preset mode, see Section 5.1.3 “Enter service or preset mode” on page 123
2) Select Manual.
3) Select main preset group, according to the list below.
4) Select preset, within the main preset group.
5) Select preset value.
6) Press OK or Confirm.
7) Press Save to store new value.

5.3.2.2 Main preset group

0 - Start up

1 - Configuration

2 - Set values and limits

3 - Alarm resolving times

4 - Assisted priming

5 - Rinse back

6 - Disinfection

7 - Single needle

8 - Bicarbonate concentrates

9 - BPM settings

10 - Profiling

11 - Diascan settings

12 - `User interface`

13 - `Recirculation`

NOTE!
Each main preset group contains a different number of presets.

5.3.2.3 Language

The language (which is a preset) can be adjusted to the operator's geographic location in the `Language` tab.

Procedure

1) Enter `Preset` mode, see Section 5.1.3 "Enter service or preset mode" on page 123.
2) Select the `Manual` tab.
3) Press `Configuration`.
4) Press `Language`.
5) Press `Language` in the right column and change the language.
6) Press `Confirm`.
7) Press `Save`.

5.3.3 Export and import presets

5.3.3.1 To export presets

Perform the following steps on the dialysis machine with the correct presets.

Procedure

1) Start the dialysis machine.
2) Insert the USB flash drive.
3) Enter `Preset` mode, see Section 5.1.3 "Enter service or preset mode" on page 123.
4) Select the `Export` tab.
5) Press `Export` to save the settings to the USB flash drive.

5.3.3.2 To import presets

Perform the following on each dialysis machine to preset.

Procedure

1) Start the dialysis machine.
2) Insert the USB flash drive.
3) Enter `Preset` mode, see Section 5.1.3 "Enter service or preset mode" on page 123.
4) Select the `Import` tab.
5) Press `Import` to load the settings to the machine.

5.3.3.3 To edit preset files offline

With the Gambro software AK 98 Preset Editor installed on a PC you can edit preset files offline.

Install AK 98 Preset Editor on the PC. Export the preset files from the AK 98 dialysis machine to a USB flash drive and then import them to the PC.

Refer to Section 5.3.3.1 “To export presets” on page 129, Section 5.3.3.2 “To import presets” on page 129 and the AK 98 Preset Editor - User Guide for more information.

5.3.3.4 To configure multiple dialysis machines

Perform the following to configure multiple dialysis machines with the same presets:

Procedure

1) Preset one AK 98 dialysis machine with the correct presets.
2) Export the settings to a USB flash drive. Refer to Section 5.3.3.1 “To export presets” on page 129.
3) Import the settings from the USB flash drive to the other machines, one at the time. Refer to Section 5.3.3.2 “To import presets” on page 129.

5.3.4 Default preset

The Default preset should be treated with care, as it will erase all customised presets and restore factory default values.

Procedure

1) Enter `Preset` mode, see Section 5.1.3 “Enter service or preset mode” on page 123.
2) Select the `Default` tab.
3) Press `Set Default`.
4) Press `Confirm`.

5.4 Service mode

5.4.1 Service mode overview

In the Service mode you can access the:

- `Calibration` tab to calibrate the transducers and variable flow, set the clock, and calibrate the touch screen. Refer to Section 5.4.2.1 “Calibration menu” on page 131.
- `Utility` tab to clear the chemical disinfection status or disinfection/decalcification attentions, perform service tests or drain, export log data to USB flash drive or import log config from a USB flash drive. Refer to Section 5.4.3.1 “Utility tasks” on page 131.
- `Diagnose` tab to scan for hardware updates on the i2c bus, view and erase technical errors, perform tests and calibrations, and enter settings. Refer to Section 5.4.4.1 “About diagnose” on page 133.

5.4.2 Calibration

5.4.2.1 Calibration menu

In the calibration menu you can calibrate the transducers and the variable flow, set the clock, and calibrate the touch screeen.

NOTE!
For information about how to perform the calibrations refer to chapter Section 7 “Calibrations” on page 151.

5.4.3 Utility

5.4.3.1 Utility tasks

Utility allows the technician to do the following:

- Clear Chem Status
- Clear Disinfection/Decalcification attention
- Perform Service tests
- Perform a Drain
- Export log data to USB
- Import Log Config from USB

5.4.3.2 Chemical status

5.4.3.2.1 When to abort chemical disinfection

WARNING!
The status for chemical disinfection shall only be changed in service situations.

When the machine is in chemical disinfection mode, a logical flag in an SafeRAM is set to TRUE to make sure that it is impossible to force the machine out of chemical disinfection mode by restarting.

In service situations where a chemical program is tested without using a disinfectant (using, e.g. RO-water instead) it can be desirable to abort chemical disinfection program.

5.4.3.2.2 To abort the chemical disinfection program

Procedure

1) Enter `Service` mode, see Section 5.1.3 “Enter service or preset mode” on page 123.
2) Select the `Utility` tab.
3) Press `Chem status and Disinf/Decalc attentions`.
4) Press `Clear Chem Status`.
5) Press `Clear Disinf/Decalc attentions`.
6) Press `Exit to FCH` to do a functional check.

5.4.3.3 Service tests

5.4.3.3.1 Service test types

Three different service tests can be performed here:

- `Sensor tests`
- `Pump test`
- `Leakage test` (fluid path leakage test)

> **NOTE!**
> If leakage test is activated a leakage test will be performed during the next functional check.

5.4.3.3.2 To do a service test

Procedure

1) Enter `Service` mode, see Section 5.1.3 “Enter service or preset mode” on page 123.
2) Select the `Utility` tab.
3) Press `Service tests`.
4) Press the type of test you want to run.
5) Press `Start`.

5.4.3.3.3 Sensor tests

This is a test of the detectors in the AK 98 dialysis machine. The machine will prompt the user to perform a certain action, e.g. to disconnect the “A”-concentrate connector, connect the “A”-concentrate connector.

> **NOTE!**
> Press `Skip` to cancel the test. The status of the test object is displayed and the prompt for the next test appears.

The following tests are included:

- Open/close BiCart cartridge holder
- Disconnect/connect conc. A connector
- Disconnect/connect conc. B connector
- Open/close blood pump cover
- Obstruct priming detector (Protective system)
- Obstruct priming detector (Control system)
- Heparin pump/heparin pump overload test
- Disconnect/connect left/right dia connector
- INVA test (Pumps will be started)
- Air detector test (Filled drip chamber in the air detector)

5.4.3.3.4 Pump test

When Pump test is selected, a test is performed on the fluid monitor. The purpose of the test is to indicate the performance of the flow- and suction pumps.

- Degassing pressure is regulated to -500 mmHg. The duty cycle for the flow pump must not exceed 90%.
- HPG is regulated to -100 mmHg. The duty cycle for the suction pump must not exceed 90%.

5.4.3.3.5 Fluid path leakage test

When Leakage test is selected, it is possible to manually set the flag for fluid path leakage test. This will enable the machine to perform a leakage test of all components in the fluid path between INVA and DIVA in functional check at the next coming start-up.

5.4.3.4 Service drain

In the utility menu the machine can be drained. The advantage to use this function is that the machine is still in service mode when the service drain is done - this saves time for the technician. The service drain takes approx. 4 minutes.

Procedure

1) Enter `Service` mode, see Section 5.1.3 “Enter service or preset mode” on page 123.
2) Select the `Utility` tab.
3) Press `Drain`.
4) Press `Start`.

5.4.4 Diagnose

5.4.4.1 About diagnose

The `Diagnose` tab allows the service engineer to perform tests and measurements in different parts of the machine.

WARNING!
In `Diagnose` mode, it is possible to make settings far outside normal limits, and leakages in the flow path may appear. Be careful!

The `Diagnose` tab has the following sections:

- `System`
- `Blood module`
- `Fluid module`

5.4.4.2 System

5.4.4.2.1 System tasks

- `I2C scan` – scan and update transducer E^2PROMs
- `Technical error support select` – view and erase the error code buffer

5.4.4.2.2 To scan transducers via the data bus

Procedure

1) Enter `Service` mode, see Section 5.1.3 “Enter service or preset mode” on page 123.
2) Select the `Diagnose` tab.
3) Press `System`.
4) Press `I2C scan`.
5) Press `Start` to initiate the scan.

5.4.4.2.3 Error codes

If a technical error appears - either during the functional check, or in treatment - the AK 98 dialysis machine places an error code in a memory, called the error code buffer. The buffer’s content is kept after the machine is switched off, allowing a technician to view it at a later time.

NOTE!
For more information about the error message refer to the AK 98 dialysis machine - Error Code and Service logging List.

NOTE!
It is important that the program version on the “Error Codes and Service Logging List” correspond with the program version installed on the AK 98 dialysis machine.

The main error groups can be interpreted as follows:

Table 5-1. The main error groups can be interpreted as follows:

Error code (the first two digits in the code)	Generated by
01	Protective
02	Front IO P
03	General IO P
04	Power IO P
05	Control
06	Front IO C
07	General IO C
08	Power IO C
09	UI
10	UI IO P

5.4.4.2.4 To view technical errors

Procedure

1) Enter `Service` mode, see Section 5.1.3 “Enter service or preset mode” on page 123.
2) Select the `Diagnose` tab.
3) Press `System`.
4) Press `Technical error support select`.
5) Press `View technical errors` to open the `Error list`.

5.4.4.2.5 To erase technical errors

Procedure

1) Enter `Service` mode, see Section 5.1.3 “Enter service or preset mode” on page 123.
2) Select the `Diagnose` tab.
3) Press `System`.
4) Press `Technical error support select`.
5) Press `Erase technical errors`.

5.4.4.3 Blood module

5.4.4.3.1 Blood module tasks

`BPM`:

- `Start air leakage test`: if the leakage is out of limit from the cuff or from the BPM to the cuff.
- `Start pressure test`: the accuracy of the pressure transducer is checked against an external reference instrument.
- `BPM Pressure`: the readout of the BPM pressure.
- `Start inflation test`: if the inflation time is out of limits the pump is not effective enough or the system is leaking.

`Lamps`: test the lamps

`Pumps`: test the blood pump and the heparin pump

- `Arterial`
  - `Arterial pump RPM`: Readout of the blood pump speed (0 - 115)
  - `Set RPM`: Set point for the blood pump speed (0 - 115)
- `Heparin`
  - `EST-ACC`: Estimated-accumulated - counts “theoretical” potentiometer pulses the way they should accumulate.
  - `ACC`: Accumulated - counts the actual pulses from the encoder.
  - `Set frequency`: The heparin pump motor will start to run with the set frequency (0-667), as soon as this diagnostics mode is entered.

5.4.4.3.2 To start BPM tests

Procedure

1) Enter `Service` mode, see Section 5.1.3 “Enter service or preset mode” on page 123.
2) Select the `Diagnose` tab.
3) Press `Blood module`.
4) Press `BPM`.
5) Press the test you need to run.
6) Press `Confirm` to start the test.

5.4.4.3.3 BPM sub-tests

The following sub-tests are included:

- Air leakage test: measures that the equipment is airtight.
- Inflation speed test: measures the time to fill the cuff with air.
- Pressure test: checks the pressure transducer calibration.

Each of the tests can be carried out separately, but the above order for carrying out the sub-tests is recommended.

Check that the results from the sub-tests do not exceed the following limits:

- Air leakage: maximum 18 mmHg/3 min
- Inflation speed: 2 -11 s
- Pressure transducer test: Maximum deviation from reference to be within ± 3 mmHg

  50 ± 3 mmHg

  150 ± 3 mmHg

  250 ± 3 mmHg

5.4.4.3.4 Check of air leakage

By entering this test mode, the air leakage for the BPM module, cuff hose, and cuff will be tested automatically.

The BPM test equipment is used to simulate the circumference of the patient's arm. The air leakage is only tested for 90 sec but the value is recalculated for 3 minutes. If the displayed value is above 18 mmHg / 3 minutes, this indicates that there is a possible air leakage in the system.

To check for air leakage within the AK 98 dialysis machine, replace the cuff and cuff hose with a closed tube.

NOTE!
Before entering the air leakage test mode, attach BPM cuff with size (Adult 23-33 cm), tight to the BPM test equipment, K22151001.

NOTE!
Before entering the air leakage test mode, connect the cuff and cuff hose to the AK 98 dialysis machine.

5.4.4.3.5 Air leakage test

Procedure

1) Start the AK 98 dialysis machine.
2) Enter `Service` mode, see Section 5.1.3 “Enter service or preset mode” on page 123.
3) Select `Diagnose`.
4) Press `Blood module`.
5) Press `BPM`.
6) Press `Start air leakage test`.
7) Press `Confirm`.

5.4.4.3.6 Check of inflation speed

By entering this test mode, the capacity of the pump within the module will be tested automatically. If the displayed time is over 11 seconds, it indicates that the pump is worn out.

> **NOTE!**
> Before entering the inflation speed test mode, attach BPM cuff with size (Adult 23-33 cm), tight to the BPM test equipment, K22151001.

5.4.4.3.7 Inflation test

Procedure

1) Start the AK 98 dialysis machine.
2) Enter `Service` mode, see Section 5.1.3 “Enter service or preset mode” on page 123.
3) Select `Diagnose`.
4) Press `Blood module`.
5) Press `BPM`.
6) Press `Start inflation test`.
7) Press `Confirm`.

5.4.4.3.8 Check of pressure transducer

By entering this test mode it will be possible to check the actual pressure value for the BPM pressure on the AK 98 dialysis machine display.

> **NOTE!**
> Before entering pressure test mode, connect the Gambro reference instrument, together with a calibration tube set from kit K13983002, to the BPM connector on the AK 98 dialysis machine.

> **NOTE!**
> No cuff or cuff hose shall be connected during the pressure transducer test.

5.4.4.3.9 Pressure test

Procedure

1) Start the AK 98 dialysis machine.
2) Enter `Service` mode, see Section 5.1.3 “Enter service or preset mode” on page 123.
3) Select `Diagnose`.
4) Press `Blood module`.
5) Press `BPM`.
6) Press `Start pressure test`.
7) Press `Confirm`.

What to do next

> **NOTE!**
> The pressure transducer calibration tube kit shall be drained before being connected, to make sure that no fluids or particles enters the BPM connector or tubing's. This might otherwise damage or destroy the sensitive BPM sensors.

> **NOTE!**
> The BPM is equipped with an overpressure protection. It is activated for pressures above 300 mmHg.

> **NOTE!**
> The pressure transducer test is to be performed within approx. 2 minutes. Then the pressure is automatically released.

5.4.4.3.10 Check of pressure transducer calibration and measured pressure

Procedure

1) Enter Pressure transducer test mode. When "`Current pressure: xxx mmHg`" is displayed, the external reference pressure can be applied.
2) Apply a pressure of 50 mmHg. Check deviation from reference pressure instrument for displayed value is 50 ± 3 mmHg.
3) Apply a pressure of 150 mmHg. Check deviation from reference pressure instrument for displayed value is 150 ± 3 mmHg.
4) Apply a pressure of 250 mmHg. Check deviation from reference pressure instrument for displayed value is 250 ± 3 mmHg.
5) Apply a pressure of 280 mmHg and slowly increase the pressure until the BPM reaches its overpressure point. Check that the overpressure point is at 300 mmHg (± 20 mmHg).

5.4.4.3.11 To start lamps test

Procedure

1) Enter `Service` mode, see Section 5.1.3 "Enter service or preset mode" on page 123.
2) Select the `Diagnose` tab.
3) Press `Blood module`.
4) Press `Lamps`
5) Press `Start`.
6) Press `Cancel`, when done.

5.4.4.3.12 To start a pump test

Procedure

1) Enter `Service` mode, see Section 5.1.3 "Enter service or preset mode" on page 123.
2) Select the `Diagnose` tab.
3) Press `Blood module`.
4) Press `Pumps`.

5) **Arterial**

a) Select `Arterial`.

b) Select `Set RPM` to adjust the blood pump speed.

c) Press `OK`.

6) **Heparin**

a) Select `Heparin`.

b) Select `Set frequency` to adjust the frequency.

c) Press `OK`.

5.4.4.4 Fluid module

5.4.4.4.1 Fluid module tasks

- `Variable flow`, refer to Section 5.4.4.4.2 "Variable flow" on page 139.
- `Pumps`, refer to Section 5.4.4.4.3.1 "Pump diagnose" on page 140.
- `UF sensor values`, refer to Section 5.4.4.4.5 "To perform a UF taration" on page 141.
- `UF taration`, refer to Section 5.4.4.4.5 "To perform a UF taration" on page 141.
- `Valves`, refer to Section 5.4.4.4.6 "Valves" on page 141.

5.4.4.4.2 Variable flow

This mode can be used to test how many steps the stepping motor needs to move to obtain a certain flow.

Procedure

1) Start the AK 98 dialysis machine.

2) Enter `Service` mode, see Section 5.1.3 "Enter service or preset mode" on page 123.

3) Select the `Diagnose` tab.

4) Place the A-pickup tube in the concentrate container.

5) Wait until the conductivity is stable.

6) Press `Fluid module`.

7) Press `Variable flow`.

8) Press `Start` to initiate the test.

Results

- `Flow:` The average dialysis flow in the AK 98 dialysis machine.
- `Calibration steps`: The number of steps at entrance to service/functional check according to a previous calibration.
- `Steps`: The position of the stepper motor (steps). It can be adjusted with the keypad.

When diagnostics is aborted (by pressing `Cancel`), the machine will re-position the motor to the calibrated value and display the following information:

```
Adjusting variable flow, please wait ({0} sec. remaining)
```

5.4.4.4.3 Fluid module pumps

5.4.4.4.3.1 Pump diagnose

In `Pumps` the AK 98 dialysis machine enters “normal” treatment mode, starts the fluid part, and maintains a flow. It runs with the following set values:

- Temperature 37.0°C
- Conductivity 14 mS/cm
- HPG pressure -100 mmHg
- Degassing pressure -610 mmHg

The machine uses concentrate pump A and conductivity cell A to regulate the conductivity.

5.4.4.4.3.2 To regulate pump parameters

Procedure

1) Enter `Service` mode, see Section 5.1.3 “Enter service or preset mode” on page 123.
2) Select the `Diagnose` tab.
3) Press `Fluid module`.
4) Press `Pumps`.
5) Press `Start` to change the fluid flow parameters.
6) Press each of the fluid flow parameters that you need to change.

   Press `OK` if changes are made.
7) Wait for stable conductivity.
8) Press `Cancel` when done .

5.4.4.4.4 UF sensor values

Procedure

1) Enter `Service` mode, see Section 5.1.3 “Enter service or preset mode” on page 123.
2) Select the `Diagnose` tab.
3) Press `Fluid module`.
4) Press `UF sensor values`.
5) Press `Start`.
6) Observe the fluid flow in Ch 1 Control, Ch 2 Control, Ch 1 Protective, and Ch 2 Protective.
7) Press `Cancel`, when done.

Results

During the test the pumps are run and the flow values that the UF cells reports can be observed.

5.4.4.4.5 To perform a UF taration

Before you begin

The choice of concentrate pump is chosen by using A or B concentrate connector. If the taration fails, the corresponding UF cell error codes are generated.

Procedure

1) Enter `Service` mode, see Section 5.1.3 "Enter service or preset mode" on page 123.
2) Select the `Diagnose` tab.
3) Press `Fluid module`.
4) Press `UF taration`.
5) Press `Start`.
6) Connect B connector to concentrate.

Results

UF sensor values can be observed in the right column when `UF sensor values` is selected.

Wait for the fluid to reach stable and correct conductivity and temperature. The taration then starts and takes about 90 seconds.

5.4.4.4.6 Valves

The valves in the fluid path can be tested by turning them on or off (open or closed).

> **NOTE!**
> Be careful when opening the AIVA to avoid fluid leakage into the monitor.

Procedure

1) Enter `Service` mode, see Section 5.1.3 "Enter service or preset mode" on page 123.
2) Select the `Diagnose` tab.
3) Press `Fluid module`.
4) Press `Valves`.
5) Select the valve you need to open (or close).
6) Press `Start` to change the valve status.

5.5 Update AK 98™ system firmware

Procedure

1) Insert the USB flash drive in the USB port (1) according to Figure 5-1 "USB port" on page 142.

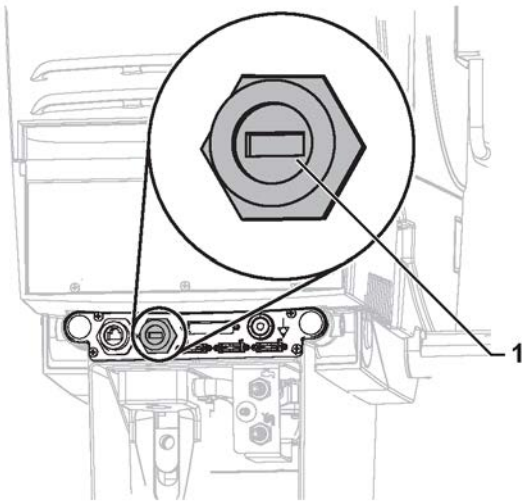

Figure 5-1. USB port

2) Start the dialysis machine.
3) Press `Yes` in the dialogue box to continue software update.
4) Enter password.
5) Select software.
6) Press `Install`.
7) Press `Yes` to confirm software update.
8) It is possible to remove the USB flash drive when "`Remove the USB flash drive.`" is visible in the software update menu.
9) When the update is finished, restart the machine according to the instructions on the screen.
10) Check that the system software version has been updated to the expected version. The system software version is visible in the startup screen, and in the `Machine` tab in the `Main` menu.

Results

NOTE!
The update can fail for several reasons, for example, when the update file is corrupt or missing. Check that the correct file is on the USB stick, then retry the update from the start. Please contact your local **Gambro Service representative** if the problem persists.

6 Replacements

6.1 Actions after component replacement

6.1.1 Replacement matrix

The actions to be performed after replacing a component are brought together in a replacement matrix.

The numbers in the matrix show the actions and the order they are to be performed in. It is important that the actions are performed in the correct order.

In the matrix, BM stands for Blood Monitor and FM stands for Fluid Monitor.

The replacement matrix is only a guideline for service technicians to know which actions to perform after a component has been replaced.

! **NOTE!**
For technical error handling, (information regarding error codes) refer to the AK 98 Error Codes and Service Logging List.

AK 98™ Replacement matrix

		Actions to be done																														
		Perform decalcification and then cleaning	I2C scan	Total default	Load preset file	Calibrate conductivity cell A[A]	Calibrate conductivity cell B[A]	Calibrate conductivity cell P[A]	Calibrate pressure transducer[A]	Calibrate blood leak	Calibrate pressure regulator, PR2	Calibrate touch screen	Functional check	Heat disinfection	Check conductivity value	Simulated treatment	Calibrate pressure regulator, PR1	Check BPM	Calibrate priming detector	Calibrate pressure transducer[A]	Calibrate occlusion	Calibrate clock	Check fluid flow	Calibrate variable flow	PET-test	ELT-test	PLT-test	Estimated temperature drop	Check touch screen calibration	Check power I/O or display board	Software installation using Prep tool
Electronics	Power I/O board												3									2									1
	Display board			2	3								7						4				6	5							1
	ACDC												2												1	3	4				
	Touch screen											1	2																		
	Relay board												4	5											1	2	3				
	Mains cable																								1						
Replaced BM components	Priming detector												2						1												
	Pressure Transducer (V & A)		1										3							2[A]											
	Level detector (Air detector)												1																		
	Heparin pump												2												1						
	Clamp unit complete												2						1												
	BPTT												1																		
	Front I/O board												3					2													1
	Blood pump rotor												2								1										
	Blood pump motor unit												1																		
	Protective earth screws																								1	2	3				
Replaced FM components	Variable flow unit (or parts)																						2	1							
	UF-cell[B]												1	3		2															
	Suction pump												2	3											1						
	SAGS												1	2																	
	Pressure regulator, PR2										1		2	3																	
	Pressure regulator, PR1										2		3				1														
	PD Transducer		1						2[A]				3	4																	
	INPS												1																		
	HPG Transducer		1						2[A]				3	4																	
	Heater												2	5											1	3	4				
	General I/O board												2																		1
	Flow restrictor												1	3									2								
	Feeding pump B												1	2																	
	Feeding pump A												1	2																	
	Flow pump												2	3											1						
	Degassing Pressure Transducer		1						2[A]				3	4																	
	Conductivity Cell P	1	2					3[A]					4	6	5																
	Conductivity Cell B	1	2				3[A]						4	6	5																
	Conductivity Cell A	1	2			3[A]							4	6	5																
	BPM												2					1													
	Blood leak detector		1							2			3	4																	
	Protective earth screws																								1	2	3				
	Carbon tubeset (dialyser isolation kit)												2	5											1	3	4				
	UFSensor												1	2		3															

Remarks: [A] Not necessary to calibrate if new spare part is installed (factory calibrated)
[B] Important to follow the order of the calibrations/actions for machine performance

6.1.2 Actions to be done - description

Table 6-1. Following is a list of the suggested actions, including explanations of how to execute them or references to other instructions.

Action	Explanation
Perform decalcification and then cleaning	Perform actions according to the AK 98 operator´s manual.
I2C data bus scan	Perform actions according to the AK 98 service manual. See Section 5.4.4.2 “System” on page 133.
Total default	Perform actions according to instructions in the AK 98 service manual. See Section 5 “Maintenance support” on page 121.
Load preset file	Perform actions according to clinic routines.
Calibrate Conductivity Cell A	Perform actions according to calibration instructions in the AK 98 service manual. See Section 7.3.8 “Conductivity transducer calibration” on page 165.
Calibrate Conductivity Cell B	Calibrate according to calibration instructions in the AK 98 service manual. See Section 7.3.8 “Conductivity transducer calibration” on page 165.
Calibrate Conductivity Cell P	Calibrate according to calibration instructions in the AK 98 service manual. See Section 7.3.8 “Conductivity transducer calibration” on page 165.
Calibrate Pressure Transducer	Calibrate according to calibration instructions in the AK 98 service manual. See Section 7 “Calibrations” on page 151.
Calibrate Blood leak	Calibrate according to calibration instructions in the AK 98 service manual. See Section 7.3.6 “Blood leakage detector calibration” on page 163.
Calibrate Pressure Regulator, PR2	Calibrate according to calibration instructions in the AK 98 service manual. See Section 7.3.13 “Pressure regulator calibration, PR 2 ” on page 172.
Functional check	Start the machine and let it perform a functional check.
Heat disinfection	Perform a heat disinfection according to the AK 98 operator´s manual.
Check conductivity value	Check conductivity value, following the hospital procedure.
Simulated Treatment	Perform a simulated treatment according to check/calibration instructions in the AK 98 service manual. See Section 8 “Maintenance manual” on page 181.
Calibrate Pressure Regulator, PR1	Calibrate according to calibration instructions in the AK 98 service manual. See Section 7.3.12 “Pressure regulator calibration, PR 1” on page 171 and Section 4 “Technical data and specifications” on page 103.
Check BPM	Check according to BPM test instructions in the AK 98 service manual. See Section 5.4.4.3 “Blood module” on page 135.

Action	Explanation
Calibrate Priming Detector	Calibrate according to calibration instructions in the AK 98 service manual. See Section 7.3.4 “Priming detector calibration” on page 162.
Calibrate Occlusion	Calibrate according to calibration instructions in the AK 98 service manual. See Section 7.3.5 “Blood pump” on page 162.
Calibrate Pressure transducer	Calibrate according to calibration instructions in the AK 98 service manual Section 7 “Calibrations” on page 151.
Calibrate clock	Calibrate according to calibration instructions in the AK 98 service manual. See Section 7 “Calibrations” on page 151.
Check fluid flow	Start the machine and wait until the green fluid path lights up. Press the `Fluid` button and then select the `Fluid flow` tab to check the dialysis fluid flow.
Calibrate variable flow	Calibrate according to calibration instructions in the AK 98 service manual. See Section 7.3.7 “Variable flow calibration” on page 164.

6.1.3 Fluid unit - flow path

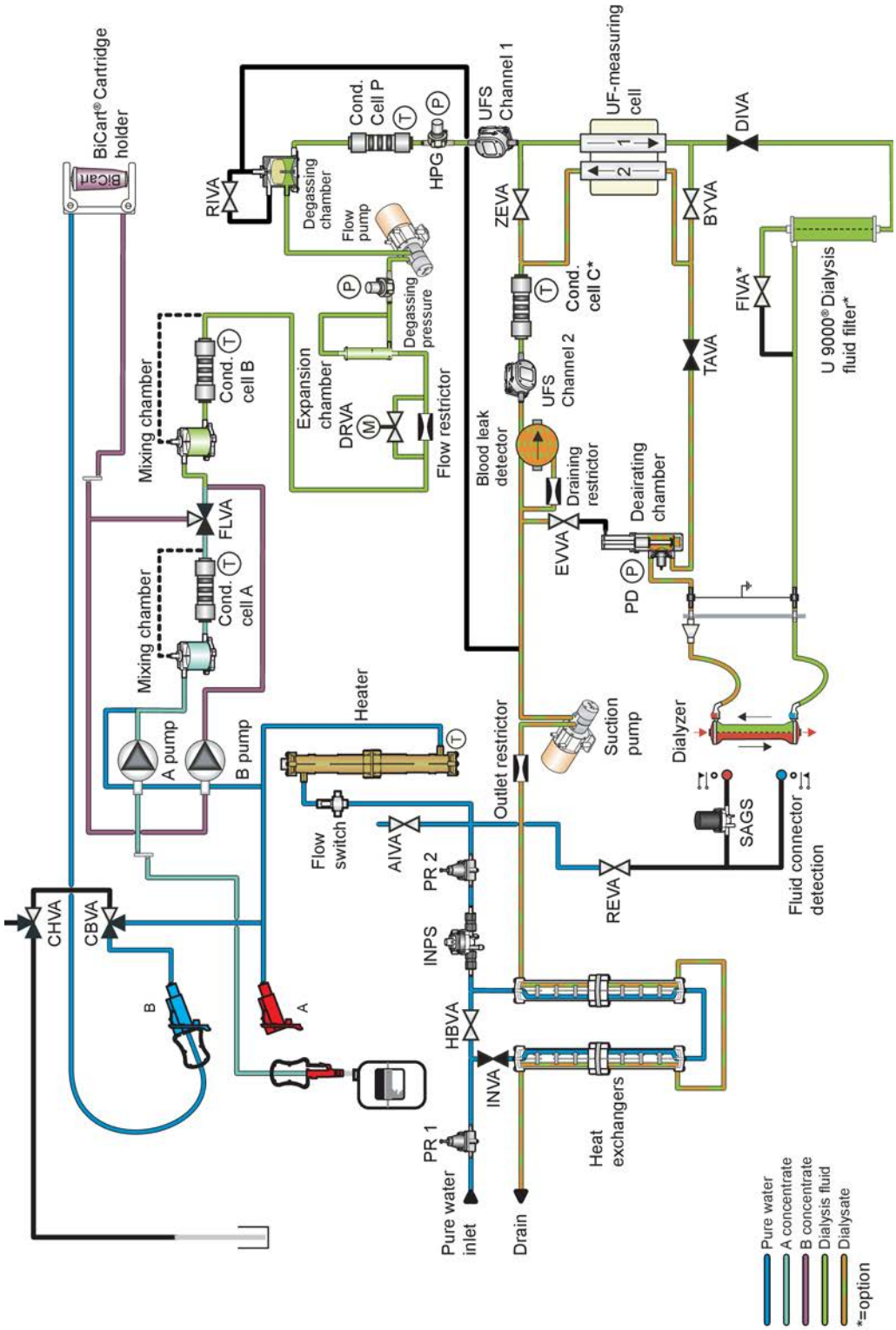

Figure 6-1. See chapter 11: "Fluid unit - flow path"

6.2 Replacement of Batteries

6.2.1 Battery

Table 6-2. The following battery is present in the dialysis machine

Description	Type	Location
Battery back-up during power failure, 12 V, Rechargeable Lead battery	LC-R127R2PG1	Behind/below the lower rear (UFD) plate

6.2.2 Battery and electronic waste handling

Separate collection for electrical and electronic equipment.

Waste handling

Batteries from the AK 98 dialysis machine shall not be discarded in normal waste, instead separate and proper collection systems shall be used. If improperly disposed, batteries might contaminate the environment and risk the health of people.

NOTE!
Follow local legislation applicable for Battery and electronic waste handling.

This page is intentionally left blank.

7 Calibrations

7.1 General information about the calibrations

7.1.1 Compensation values

During the calibration the compensation values (offset and coefficient) are calculated by the AK 98 dialysis machine and stored in each individual transducer in a small E^2PROM (Electrically Erasable Programmable Read-Only Memory) placed on the actual transducer's board.

In the beginning of the functional check the AK 98 dialysis machine will check and read all transducer compensation/calibration values to be used by the machine.

7.1.2 The data bus

The AK 98 dialysis machine uses a separate data bus – the I2C data bus – to communicate with the transducers. Each transducer board (1) contains an address – information about the board's physical position on the transducer motherboard (General I/O board (3)), physically placed on top of the UF-measuring cell (2):

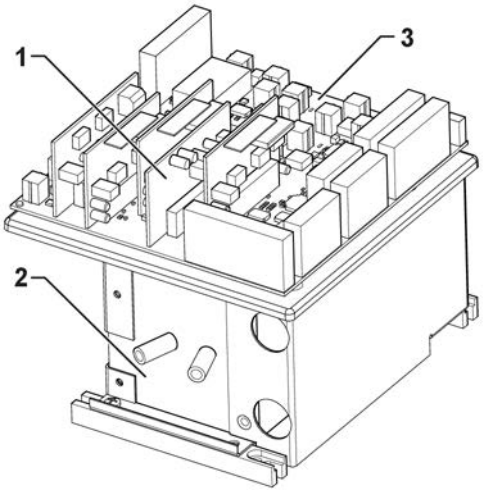

The arrangement ensures that transducers can not be interchanged without a technical error from the machine. The address – the ID-number – for a given transducer shall correspond to its physical position (the "slot") on the transducer motherboard (General I/O board).

The communication between a CPU and a set of transducers takes place through the databus. One data-bus can handle eight E^2PROMs (also called I2C-PROMs):

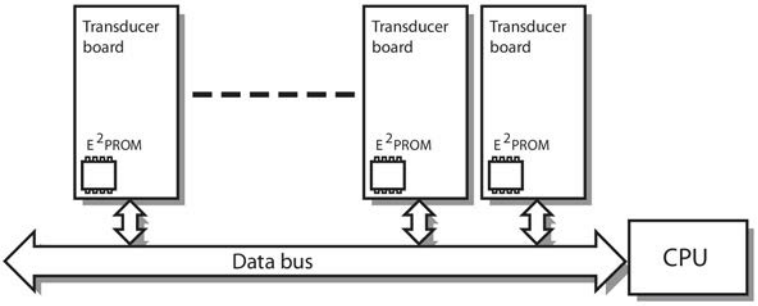

Figure 7-1. Transducer Board

There are nine data buses connected to various components, for example transducers. An overview of the data buses is shown in the figures below.

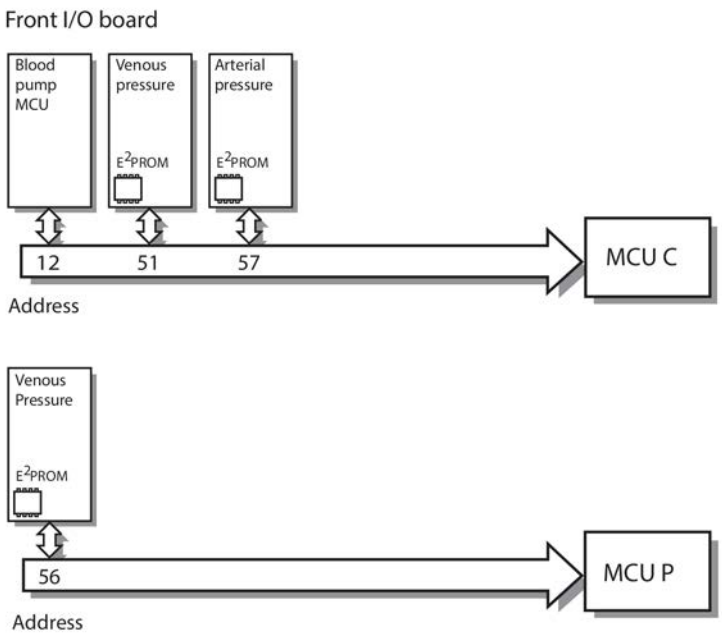

Figure 7-2. Front I/O board

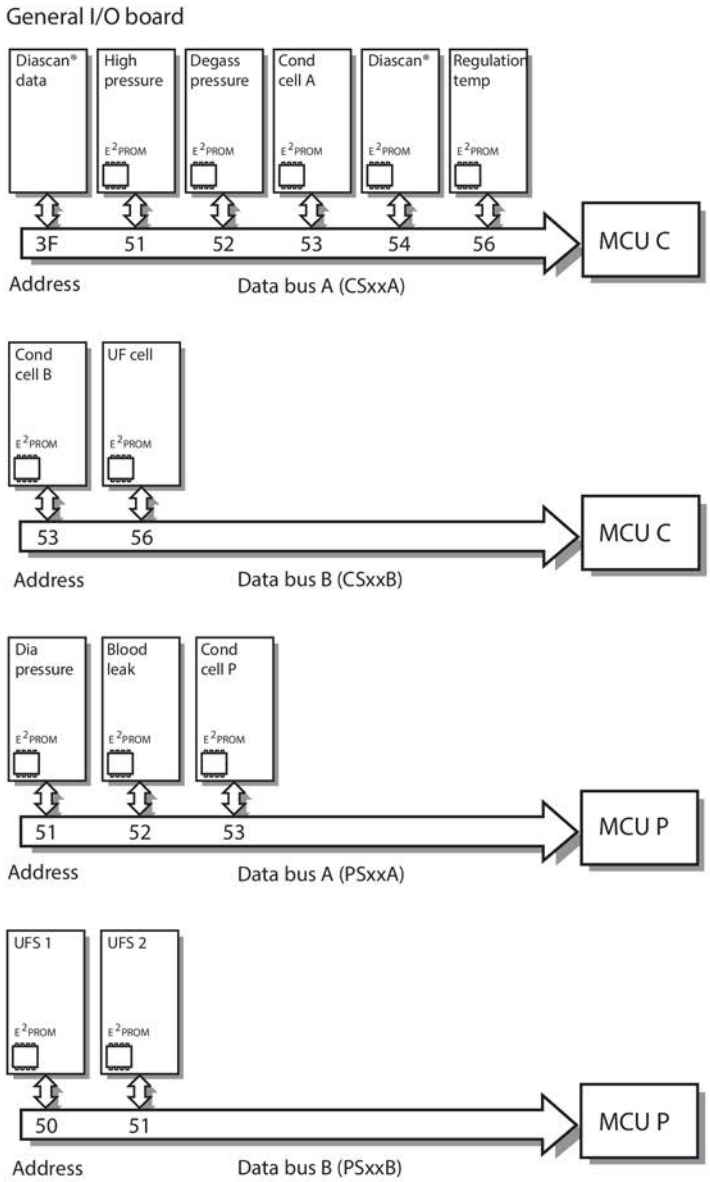

Figure 7-3. General I/O board

7.1.3 Installation of new pressure tranducers

Always perform an I2C data bus scanning when a new transducer has been installed.
See Section 5.4.4.2.2 “To scan transducers via the data bus” on page 134

7.1.4 I2C Data Bus Errors

The error codes for the I2C data buses are:

- 0623 xxx yyy and 0723 xxx yyy for the Control side
- 0223 xxx yyy and 0323 xxx yyy for the Protective side

If all error codes for a bus are issued it is most likely that one of the transducers has an error that takes “down” the whole bus.

The best solution to the problem is to disconnect one transducer at the time until only one error code is issued. Then the disconnected transducer is the faulty one and should be exchanged for a new one. If error codes for more than one data bus is issued the error is probably due to some defect on the General I/O board.

7.1.5 Calibrations

The different transducers are calibrated in different ways. The pressure transducers are calibrated in three steps (0 mmHg, -500 mmHg and +500 mmHg) while e.g. the conductivity cells are calibrated in two steps (0.0 mS and 14.0 mS)

The calibration of the UF cell differs radically from the rest, and requires a so called calibration station.

7.1.6 Why is calibration needed?

No transducer is ideal – all transducers have two basic errors: a sensitivity error and an offset error:

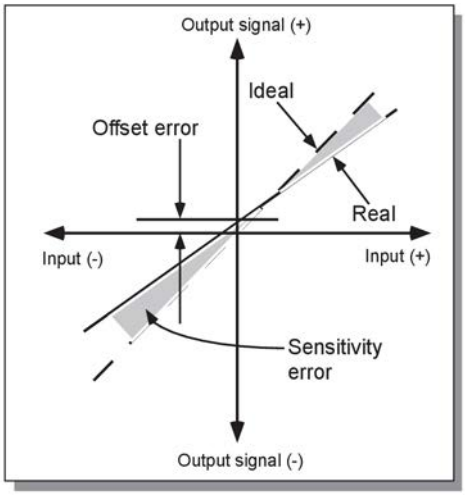

To compensate for these two, the machine shall calculate an offset value which will bring the line to cross through the zero point, and a calibration coefficient – a factor, typically between 0.90 – 1.10 which will correct the slope of the line so it matches the ideal.

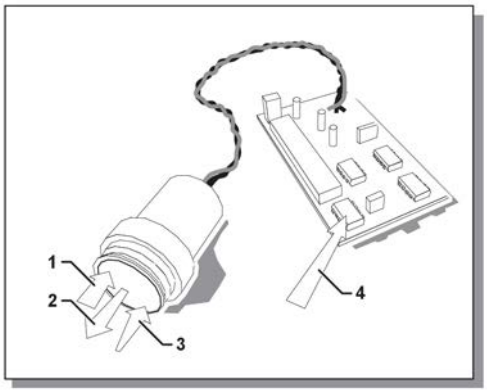

Figure 7-4. Pressure transducer.

1. No pressure
2. -500 mmHg
3. +500 mmHg
4. E^2PROM

! **NOTE!**
Never try to fit another transducer board to a transducer since there is an analog trimming made with a resistor (laser trimmed) during manufacturing.

7.1.7 Calibration errors

Table 7-1. If the machine finds that one of the calculations generated an offset or a coefficient which is outside its limits, it will generate a calibration error. There are several possibilities:

Calibration error	Reason for the error
Set value and measured value are too separated	If a value, far away from the reading on the reference instrument is entered. Typically, entering a positive pressure, when the actual pressure is negative.
Set value is too near values entered earlier	The calibration achieves highest accuracy, if the measuring points are far apart. A three-point calibration with zero, -15mm Hg and +18 mmHg will generate a poor result.

7.1.8 Calibration errors - Pressure transducers

If the AK 98 dialysis machine finds, during the pressure transducer calibration procedure, that a calculated offset or calibration coefficient is outside certain limits, a calibration error appears. These limits are:

- Offset: ±20 mmHg
- Calibration Coefficient: 0.9 – 1.1
- Correlation Coefficient: Low limit 0.95

7.2 Test equipment

Table 7-2. Following calibration instructions are based on the availability of some test equipment, listed below:

Test equipment	Tolerance	Manufacturer	Order no
Conductivity measurement	±0.1 mS/cm	MESA, IBP	N/A
Pressure measurement	±2 mmHg to ±200 mmHg ±1% beyond ±200 mmHg If BPM is installed: ±0.8 mmHg	MESA, IBP, Druck	N/A
UF calibration box	N/A	Gambro	K21908002
Temperature measurement	±0.2 ºC	MESA, IBP	N/A
Digital Voltmeter	±0.5%	Fluke	N/A
Blood leakage Calibration Cover	N/A	Gambro	K40420002
Gauge pin kit for blood pump rollers (including three different pins)	T = 1.1 (Stop pin = 1.1x2x0.7 = 1.5 mm) T = 1.6 (Stop pin = 1.6x2x0.7 = 2.2 mm) T = 2.0 (Stop pin = 2.0x2x0.7 = 2.8 mm) T = wall thickness of the blood tubing	Gambro	K40158001
Calibration tube kit	N/A	Gambro	K13983002
Tube for calibration of priming detector	See Section 7.3.4 “Priming detector calibration” on page 162.	N/A	N/A
BPM test equipment	N/A	Gambro	K22151001
Special tool	For silicone tube connectors	Gambro	K12755001

7.3 Linear transducers

7.3.1 Calibration of linear transducers

Procedure

1) Start the AK 98 dialysis machine. Enter `Service` mode, see Section 5.1.3 “Enter service or preset mode” on page 123.
2) Select `Calibration`.
3) Press `Transducers`.
4) Press `External flow support` or `Internal flow support`.

NOTE!
Press `External flow support` for no flow (pumps stopped).

NOTE!
Press `Internal flow support` for the AK 98 dialysis machine to maintain a flow during the calibration.

5) Select transducer to calibrate.

6) Follow instructions for each calibration.

7) Press `Save` to store the calibration.

Results

7.3.2 Venous pressure transducer calibration

Procedure

1) Connect the Gambro reference instrument (together with a calibration tube set) to the venous pressure transducer (blue) on the front of the AK 98 dialysis machine, according to Figure 7-5 "Connect reference instrument." on page 159.

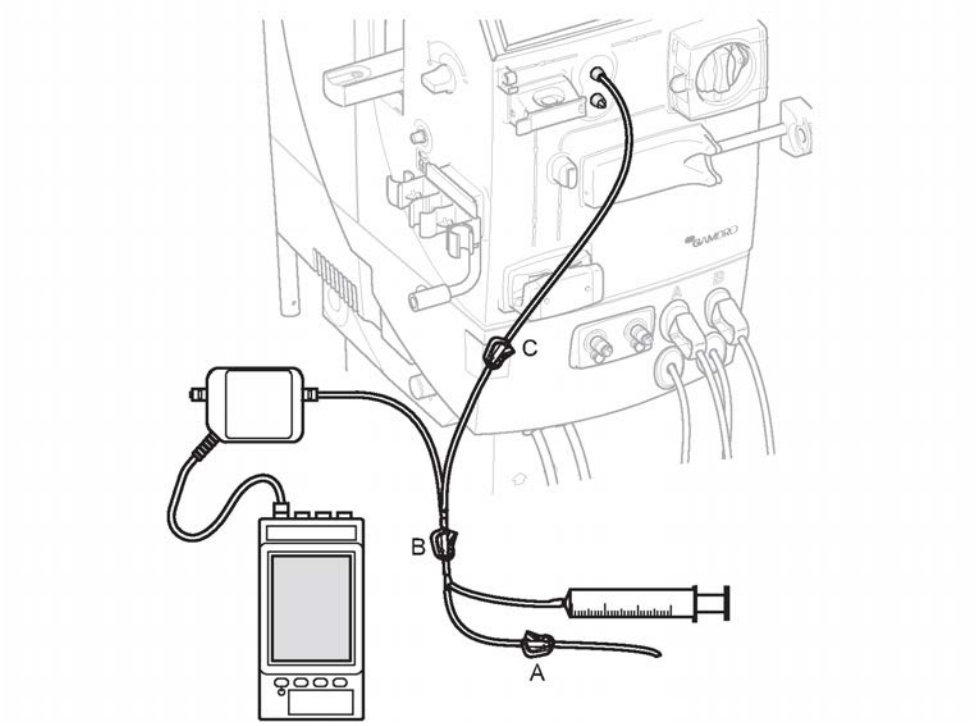

Figure 7-5. Connect reference instrument.

2) Zero set the reference instrument, wait for stable reading.

3) Start the AK 98 dialysis machine. Enter `Service` mode, see Section 5.1.3 "Enter service or preset mode" on page 123.

4) Select `Calibration`.

5) Press `Transducers`.

6) Press `External flow support`.

7) Press `Venous pressure transducer CPU P`.

8) Apply zero pressure by opening the three clamps A, B and C on the calibration tube set.

9) Press `Apply Pressure 0 mmHg` and set the reference value to 0 mmHg according to the zero value on the reference instrument.

10) Press `OK`.

11) Close clamp A. Apply a pressure of approx. -500 mmHg, shown on the reference instrument. Close clamp B.

12) Press `Apply Pressure -500 mmHg` and set the reference value to the reading (mmHg) on the reference instrument.

13) Press `OK`.

14) The machine now enters the sensitivity calibration.

15) Open clamp A and B, then close clamp A again. Apply a pressure of approx. +500 mmHg, shown on the reference instrument. Close clamp B.

16) Press `Apply Pressure +500 mmHg` and set the value to the reading (mmHg) on the reference instrument.

17) Press `OK`.

18) Press `Save` to store the calibration.

    If the calibration is to be aborted without saving the new calibration values: Press `Cancel`.

19) Continue with the venous pressure transducer calibration for control system. Follow this instruction except for selection of transducer, where `Venous pressure transducer CPU C` shall be selected instead.

Results

NOTE!
If a calibration error occurs:

- Restart the calibration.
- If the error occurs a second time: Change the transducer and the transducer board.

7.3.3 Arterial pressure transducer calibration

Procedure

1) Connect the Gambro reference instrument (together with a calibration tube set) to the arterial pressure transducer (red) on the front of the AK 98 dialysis machine, according to Figure 7-6 “Connect reference instrument” on page 161.

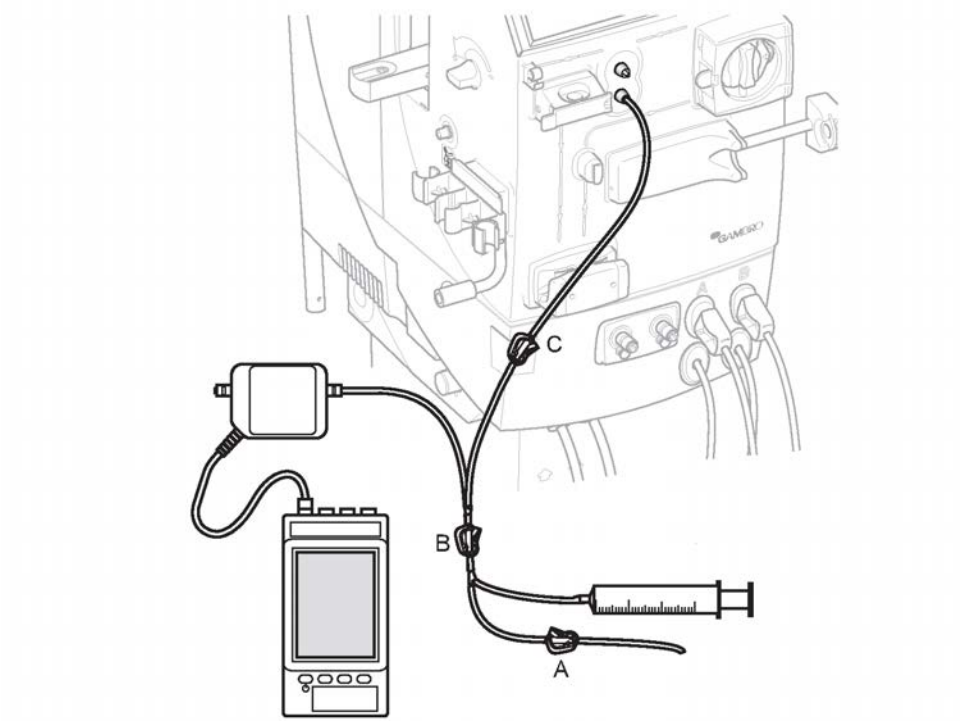

Figure 7-6. Connect reference instrument

2) Zero set the reference instrument, wait for stable reading.
3) Start the AK 98 dialysis machine. Enter `Service` mode, see Section 5.1.3 "Enter service or preset mode" on page 123.
4) Select `Calibration`.
5) Press `Transducers`.
6) Press `External flow support`.
7) Press `Arterial pressure transducer`.
8) Apply zero pressure by opening the three clamps A, B and C on the calibration tube set.
9) Press `Apply Pressure 0 mmHg` and set the reference value to 0 mmHg according to the zero value on the reference instrument.
10) Press `OK`.
11) Close clamp A. Apply a pressure of approx. -500 mmHg, shown on the reference instrument. Close clamp B.
12) Press `Apply Pressure -500 mmHg` and set the reference value to the reading (mmHg) on the reference instrument.
13) Press `OK`.
14) The machine now enters the sensitivity calibration.
15) Open clamp A and B, then close clamp A again. Apply a pressure of approx. +500 mmHg, shown on the reference instrument. Close clamp B.
16) Press `Apply Pressure +500 mmHg` and set the value to the reading (mmHg) on the reference instrument.
17) Press `OK`.
18) Press `Save` to store the calibration.

If the calibration is to be aborted without saving the new calibration values: Press `Cancel`.

Results

> **NOTE!**
> **If a calibration error occurs:**
>
> - Restart the calibration.
> - If the error occurs a second time: Change the transducer and the transducer board.

7.3.4 Priming detector calibration

Procedure

1) Start the AK 98 dialysis machine. Enter `Service` mode, see Section 5.1.3 "Enter service or preset mode" on page 123.
2) Select `Calibration`.
3) Press `Transducers`.
4) Press `External flow support`.
5) Press `Priming detector`.
6) Follow the instructions on the display: `Insert empty tube`. Insert an empty reference tube in the priming detector. The reference tube shall be from the same type of blood line as used during treatment.
7) Press `Start`.

   The calibration is now done automatically and the calibration factor is stored.

Results

> **NOTE!**
> If a calibration error occurs, the calibration shall be restarted, or the priming detector replaced.

7.3.5 Blood pump

7.3.5.1 Occlusion adjustment

- Check surface on the roller at the pump rotor, if it is damaged exchange the unit.
- The roller unit should easily go back to upper end position when it has been pressed down to end position, exchange unit if it gets stuck in any position.

> **NOTE!**
> If the pump segment has a different wall thickness, the occlusion of the pump shall be adjusted to the correct wall thickness.

Use the gauge pins (stop/go) available in the kit K40158001. The kit includes following three different gauge pins:

T = 1.1 (Stop pin = 1.1x2x0.7 = 1.5mm)

T = 1.6 (Stop pin = 1.6x2x0.7 = 2.2mm)

T = 2.0 (Stop pin = 2.0x2x0.7 = 2.8mm)

T = wall thickness of the blood tubing

Use following formula to calculate which gauge pin to use:

2 x wall thickness x 0,7 (mm)

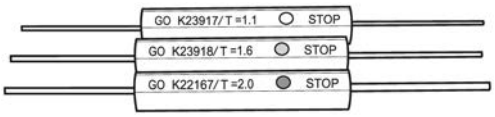

7.3.5.2 Adjustment instruction

Check the range between the blood pump rollers and the path according to Figure 7-7 "Blood pump" on page 163. Adjust range between the blood pump rollers and the path if it is necessary.

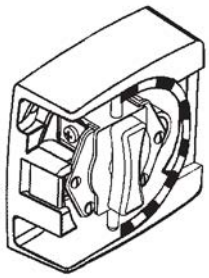

Figure 7-7. Blood pump

- The GO pin should barely pass within the calibrating area.
- The STOP pin is **NOT** allowed to pass in any point within the calibrating area.

NOTE!
Put grease on the GO and STOP pins when not used and store gauge in plastic bag to prevent it from corroding.

7.3.6 Blood leakage detector calibration

NOTE!
In order to maintain stable temperature and to prevent disturbances caused by light admission, do not remove the BM during the calibration of the blood leakage detector.

Procedure

1) Make sure there is no fluid in the AK 98 dialysis machine monitor. If there is fluid in the monitor, press the `Disinfection` button to drain the machine.
2) Remove the blood leakage detector cover and clean the inside of the blood leakage detector housing.
3) Mount a blood leakage calibration cover (K40420002). Make sure the filter is in horizontal position (the knob on the outside of the blood leakage calibration cover).

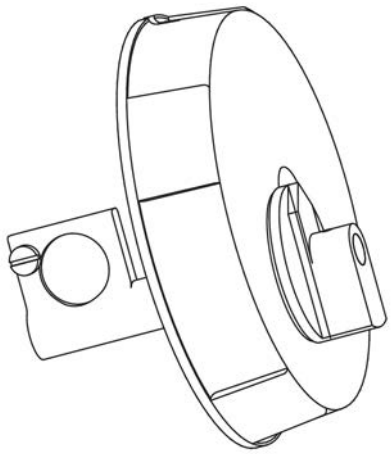

4) Start the AK 98 dialysis machine. Enter `Service` mode, see Section 5.1.3 "Enter service or preset mode" on page 123.

5) Press `Calibration`.

6) Press `Transducers`.

7) Press `Internal flow support`.

8) Press `Blood leak detector`. The `Reference:` value is automatically set to 0.

9) Place the A-pickup tube in a container filed with water. Let the internal flow in the machine stabilize for 15 minutes.

> **NOTE!**
> The filter in the blood leakage calibration cover can be damaged if concentrate is used. Use water during calibration.

10) Wait for the `Blood leak` value to stabilize. Press `Save` to save reference 0.

11) Turn the calibration filter to vertical position (the knob on the outside of the blood leakage calibration cover).

12) The `Reference:` value is automatically set to 100.

13) Wait for the `Blood leak` value to stabilize. Press `Save` to save reference 100.

14) The machine now enters the sensitivity calibration. Press `Save` to store the calibration.

    If the calibration is to be aborted without saving the new calibration values: Press `Cancel`.

15) Drain the AK 98 dialysis machine and remount the standard blood leakage cover.

7.3.7 Variable flow calibration

The variable flow calibration has a flow of 500 mL/min.

The value will then be used during functional check and when entering service mode as the flow always should be 500 mL/min in functional check and service mode.

Procedure

1) Start the AK 98 dialysis machine. Enter `Service` mode, see Section 5.1.3 "Enter service or preset mode" on page 123.

2) Press `Calibration`.

3) Place A-pickup tube in the concentrate container.

4) Press `Others`.

5) Press `Variable flow calibration`.

6) Press `Start`.

   If the calibration is to be aborted without saving the new calibration values: Press `Cancel`.

7) During the calibration the `Step:` and `Flow:` fields are updated. When a new calibration value has been determined it will automatically be stored.

8) At the end of the calibration the new calibration data for the `Step:` and `Flow:` fields are updated.

Results

NOTE!
During the variable flow calibration it is possible to supervise the conductivity and temperature.

7.3.8 Conductivity transducer calibration

7.3.8.1 About conductivity transducer calibration

The calibration is a "two point calibration". The two points are 0 mS/cm (RO-water) and 14 mS/cm (with concentrate).

WARNING!
After completing the conductivity calibrations, the conductivity value shall be confirmed by the hospital laboratory.

NOTE!
Before conductivity calibration, decalcification and cleaning shall be performed.

NOTE!
To keep the temperature inside the AK 98 dialysis machine, do not remove the blood monitor.

NOTE!
Make sure the variable flow is calibrated before performing the conductivity cell calibration. Refer to Section 7.3.7 “Variable flow calibration” on page 164.

NOTE!
There shall be flow through the measuring cell of the reference instrument during the conductivity cell calibration.

7.3.8.2 To calibrate conductivity transducer

- `Conductivity A transducer`
- `Conductivity B transducer`
- `Conductivity P transducer`
- `Conductivity ABP transducer`

NOTE!
All the transducers A, B and P are calibrated in the same way.

Procedure

1) Start the AK 98 dialysis machine. Enter `Service` mode, see Section 5.1.3 "Enter service or preset mode" on page 123.
2) Press `Calibration`.
3) Press `Transducers`.
4) Press `Internal flow support`.
5) Place A-pickup tube in concentrate.
6) Press `Conductivity cell`.
7) Select the conductivity transducer to be calibrated.
8) Activate `Fluid Bypass`, to initiate calibration.
9) Connect the Gambro reference instrument to the dialyzer connectors.
10) Deactivate `Fluid Bypass` to let the fluid run through the dialyser tubes.
11) **Calibration with concentrate**
    a) Let the AK 98 dialysis machine stabilize at 14 mS/cm and 37 °C during 15 minutes.
    b) Check that the temperature on the reference instrument is approximately 37 °C.
    c) Press `Reference: 14 mS/cm` and set the value on the display to the same value as shown on the reference instrument.
    d) Press `OK`.
12) **Calibration with RO-water**
    a) Connect both A- and B-concentrate connectors to the AK 98 dialysis machine.
    b) Let the AK 98 dialysis machine and the reference instrument stabilize at 0 mS/cm and 37 °C during at least 15 minutes.
    c) Check that the temperature on the reference instrument is approximately 37 °C.
    d) Press `Reference: 0 mS/cm` and set the value on the display to the same value as shown on the reference instrument.
    e) Press `OK`.
    f) Press `Save`. The machine enters the sensitivity calibration.

    If the calibration is to be aborted without saving the new calibration values: Press `Cancel`.

7.3.9 Dialysis pressure transducer calibration

Procedure

1) Disconnect tube no. 24465. Insert a plug (from the calibration kit) according to Figure 7-8 "Connect reference instrument" on page 167.
2) Disconnect the angled silicone connector from TAVA. Insert a plug (from the calibration kit) according to Figure 7-8 "Connect reference instrument" on page 167.
3) Disconnect tube no. 24458 from the top of the deaerating chamber.

4) Connect Gambro reference instrument to the silicone connector according to Figure 7-8 “Connect reference instrument” on page 167.

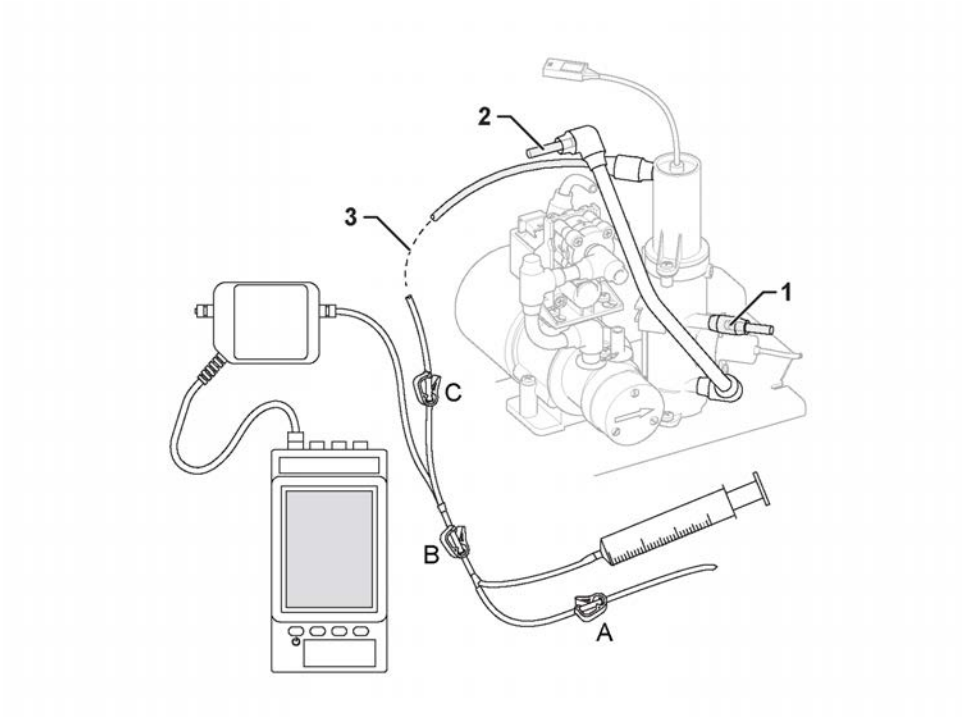

Figure 7-8. Connect reference instrument

5) Zero set the reference instrument, wait for stable reading.

6) Start the AK 98 dialysis machine. Enter `Service` mode, see Section 5.1.3 “Enter service or preset mode” on page 123.

7) Press `Calibration`.

8) Press `Transducers`.

9) Press `External flow support`.

10) Press `Dialysis pressure transducer`.

11) Apply zero pressure by opening the two clamps A, and B on the calibration tube set. The reference value is automatically set to 0 (mmHg).

12) Press `OK`.

13) Close clamp A. Apply a pressure of approx. -500 mmHg, shown on the reference instrument. Close clamp B.

14) Press `Apply Pressure -500 mmHg` and set the reference value to the reading (mmHg) on the reference instrument.

15) Press `OK`.

16) The machine now enters the sensitivity calibration.

17) Open clamp A and B, then close clamp A again. Apply a pressure of approx. +500 mmHg, shown on the reference instrument. Close clamp B.

18) Press `Apply Pressure +500 mmHg` and set the reference value to the reading (mmHg) on the reference instrument.

19) Press `OK`.

20) Press `Save` to store the calibration.

If the calibration is to be aborted without saving the new calibration values: Press `Cancel`.

Results

NOTE!
If a calibration error occurs:

- Restart the calibration.
- If the error occurs a second time: Change the transducer and the transducer board.

NOTE!
Reconnect the fluid path to its original design after the calibration.

NOTE!
Always perform a heat disinfection after the fluid path has been opened for calibration.

7.3.10 Degassing pressure transducer calibration

Procedure

1) Replace the silicone T-connector to the degassing pressure transducer with a straight silicone connector. Insert a plug (from the calibration kit) according to Figure 7-9 “Connect reference instrument” on page 168.
2) Disconnect the degassing pressure transducer from the flow pump.
3) Connect Gambro reference instrument to the silicone connector according to Figure 7-9 “Connect reference instrument” on page 168.

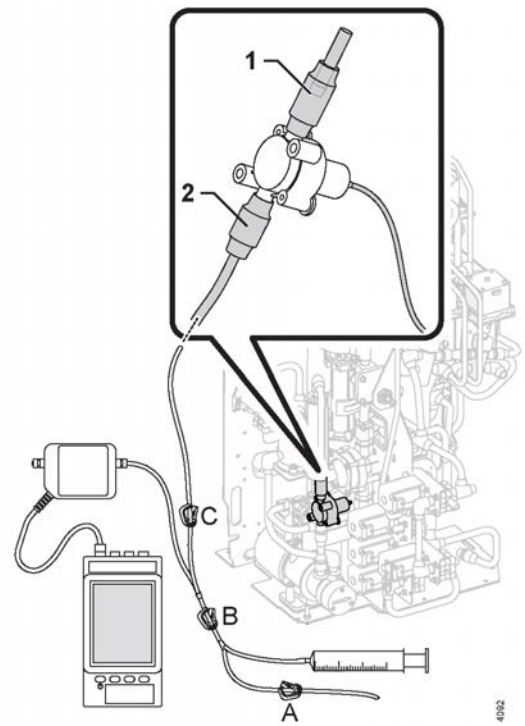

Figure 7-9. Connect reference instrument

4) Zero set the reference instrument, wait for stable reading.
5) Start the AK 98 dialysis machine. Enter `Service` mode, see Section 5.1.3 “Enter service or preset mode” on page 123.

6) Press `Calibration`.

7) Press `Transducers`.

8) Press `External flow support`.

9) Press `Degassing pressure tranducer`.

10) Apply zero pressure by opening the two clamps A, and B on the calibration tube set. The reference value is automatically set to 0 (mmHg).

11) Press `OK`.

12) Close clamp A. Apply a pressure of approx. -500 mmHg, shown on the reference instrument. Close clamp B.

13) Press `Apply Pressure -500 mmHg` and set the reference value to the reading (mmHg) on the reference instrument.

14) Press `OK`.

15) The machine now enters the sensitivity calibration.

16) Open clamp A and B, then close clamp A again. Apply a pressure of approx. +500 mmHg, shown on the reference instrument. Close clamp B.

17) Press `Apply Pressure +500 mmHg` and set the reference value to the reading (mmHg) on the reference instrument.

18) Press `OK`.

19) Press `Save` to store the calibration.

    If the calibration is to be aborted without saving the new calibration values: Press `Cancel`.

Results

NOTE!
If a calibration error occurs:

- Restart the calibration.
- If the error occurs a second time: Change the transducer and the transducer board.

NOTE!
Reconnect the fluid path to its original design after the calibration.

NOTE!
Always perform a heat disinfection after the fluid path has been opened for calibration.

7.3.11 HPG pressure transducer calibration

Procedure

1) Replace the silicone T-connector from the HPG pressure transducer with a straight silicone connector. Insert a plug (from the calibration kit) according to Figure 7-10 “Connect reference instrument” on page 170.

2) Connect Gambro reference instrument to the angled silicone connector according to Figure 7-10 “Connect reference instrument” on page 170.

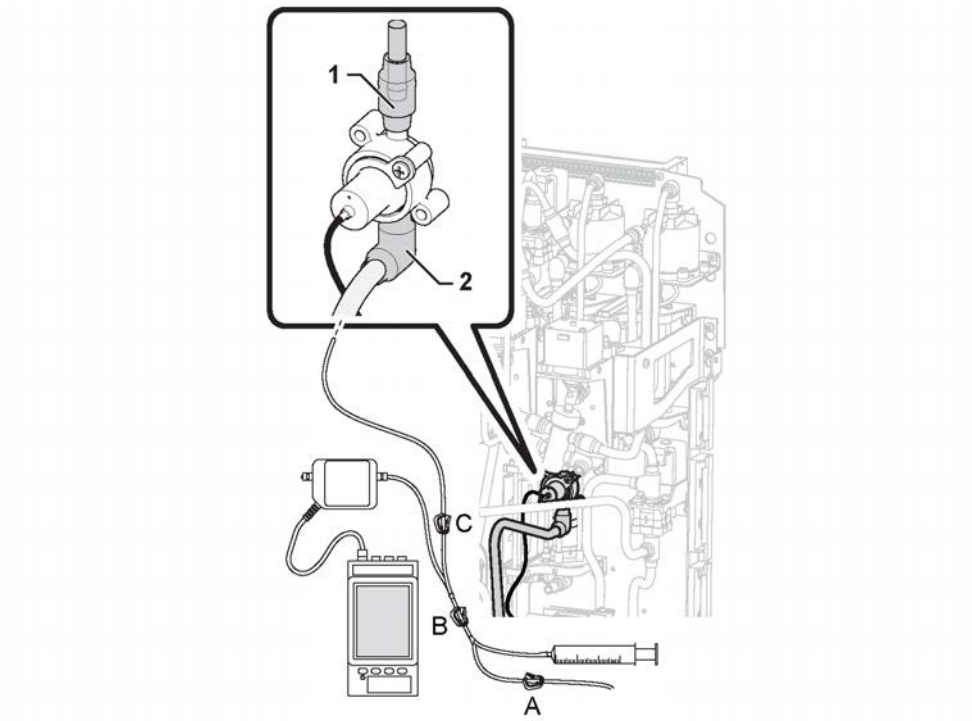

Figure 7-10. Connect reference instrument

3) Zero set the reference instrument, wait for stable reading.

4) Start the AK 98 dialysis machine. Enter `Service` mode, see Section 5.1.3 "Enter service or preset mode" on page 123.

5) Press `Calibration`.

6) Press `Transducers`.

7) Press `External flow support`.

8) Press `HPG pressure transducer`.

9) Apply zero pressure by opening the two clamps A, and B on the calibration tube set. The reference value is automatically set to 0 (mmHg).

10) Press `OK`.

11) Close clamp A. Apply a pressure of approx. -500 mmHg, shown on the reference instrument. Close clamp B.

12) Press `Apply Pressure -500 mmHg` and set the reference value to the reading (mmHg) on the reference instrument.

13) Press `OK`.

14) The machine now enters the sensitivity calibration.

15) Open clamp A and B, then close clamp A again. Apply a pressure of approx. +500 mmHg, shown on the reference instrument. Close clamp B.

16) Press `Apply Pressure +500 mmHg` and set the reference value to the reading (mmHg) on the reference instrument.

17) Press `OK`.

18) Press `Save` to store the calibration.

    If the calibration is to be aborted without saving the new calibration values: Press `Cancel`.

Results

NOTE!
If a calibration error occurs:

- Restart the calibration.
- If the error occurs a second time: Change the transducer and the transducer board.

NOTE!
Reconnect the fluid path to its original design after the calibration.

NOTE!
Always perform a heat disinfection after the fluid path has been opened for calibration.

7.3.12 Pressure regulator calibration, PR 1

Procedure

1) Turn **off** the water supply.
2) Connect Gambro reference instrument just before the INPS pressure switch, according to Figure 7-11 "Connect reference instrument" on page 171.

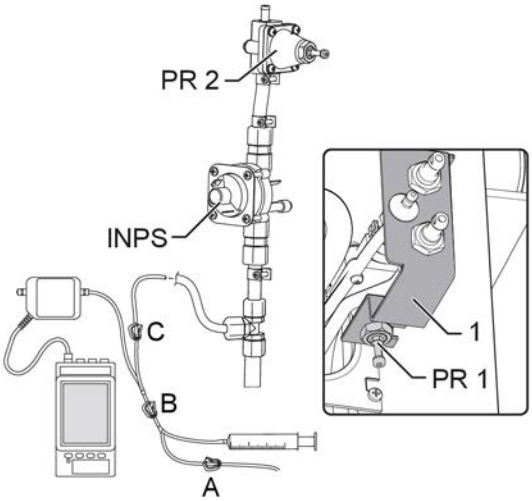

Figure 7-11. Connect reference instrument

3) Close clamp C.
4) Turn **on** the water supply.
5) Start the AK 98 dialysis machine.
6) Perform a functional check and wait until the conductivity and the temperature are stable. The fluid path on the screen shall be green before the calibration begins.
7) Zero set the reference instrument, wait for stable reading.
8) Close clamp A and B.
9) Open clamp C.
10) Remove cover plate (1).
11) Adjust the pressure regulator, PR 1, until the pressure measured at the reference instrument is 600 mmHg ±75 mmHg.

12) Perform a `Drain`.

13) Disconnect the Gambro reference instrument.

14) Assemble cover plate (1).

What to do next

NOTE!
Reconnect the fluid path to its original design after the calibration.

NOTE!
Always perform a heat disinfection after the fluid path has been opened for calibration.

7.3.13 Pressure regulator calibration, PR 2

Procedure

1) Turn **off** the water supply.

2) Connect the reference instrument to AIVA according to Figure 7-12 "Connect reference instrument" on page 172.

3) Close clamp C.

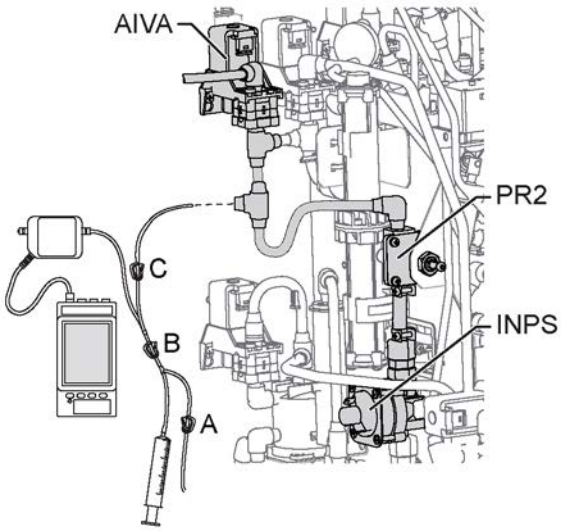

Figure 7-12. Connect reference instrument

4) Zero set the Reference instrument, wait for stable reading.

5) Close clamp A and B.

6) Turn **on** the water supply.

7) Start the AK 98 dialysis machine.

8) Perform a functional check and wait until the conductivity and the temperature are stable. The fluid path on the screen shall be green before the calibration begins.

9) Open clamp C.

10) Adjust the pressure regulator, PR 2, until the pressure measured at the reference instrument is 130 mmHg ± 10 mmHg.

11) Perform a `Drain`.

What to do next

NOTE!
Reconnect the fluid path to its original design after the calibration.

NOTE!
Always perform a heat disinfection after the fluid path has been opened for calibration.

7.4 UF control calibration

7.4.1 General

7.4.1.1 UF-measuring cell and calibration modes

This section describes the calibration routine of the UF-measuring cell.

The UF-measuring cell consists of two flow measurement channels called channel 1 (Ch1) and channel 2 (Ch2).

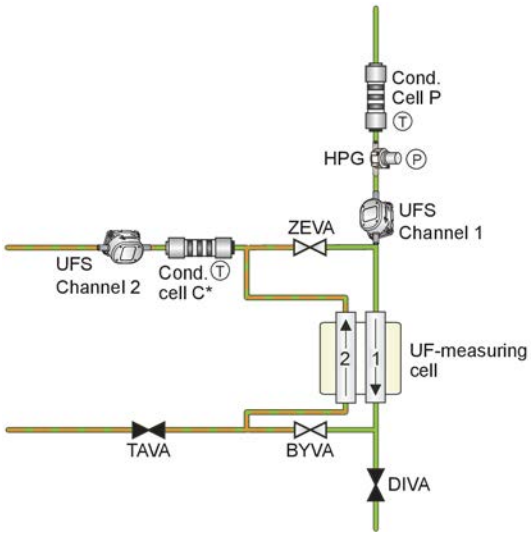

Figure 7-13. See chapter 11: "Fluid unit - flow path".

Ch1 is the channel used to measure the main flow to the dialyzer and Ch2 is used to measure the flow from the dialyzer, i.e. the sum of the main flow and the UF flow. The UF flow is the difference between Ch2 and Ch1 flows. UF flow is also called differential flow.

The UF control calibration routine can be run in 3 different modes. The modes are `UF complete calibration`, `UF Internal calibration` and `UF Verify calibration`.

- Select `UF complete calibration` for an automatic UF control calibration.
- Select `UF Internal calibration` for an internal calibration (taration but updating the E^2PROM instead of RAM). This is done without the external UF calibration equipment connected to the AK 98 dialysis machine.
- Select `UF Verify calibration` for a verification of the result from the latest calibration.

7.4.1.2 Prerequisite for the complete UF control calibration

- Perform both a disinfection and a cleaning decalcification to remove both organic and calcium precipitates, according to the operator's manual for the AK 98 dialysis machine.
- Make sure the variable flow is calibrated before performing the UF control calibration.

  Refer to Section 7.3.7 "Variable flow calibration" on page 164
- The Complete calibration routine requires that the external UF calibration station (ordering no. K21908002) is connected to the AK 98 dialysis machine, see figure below.

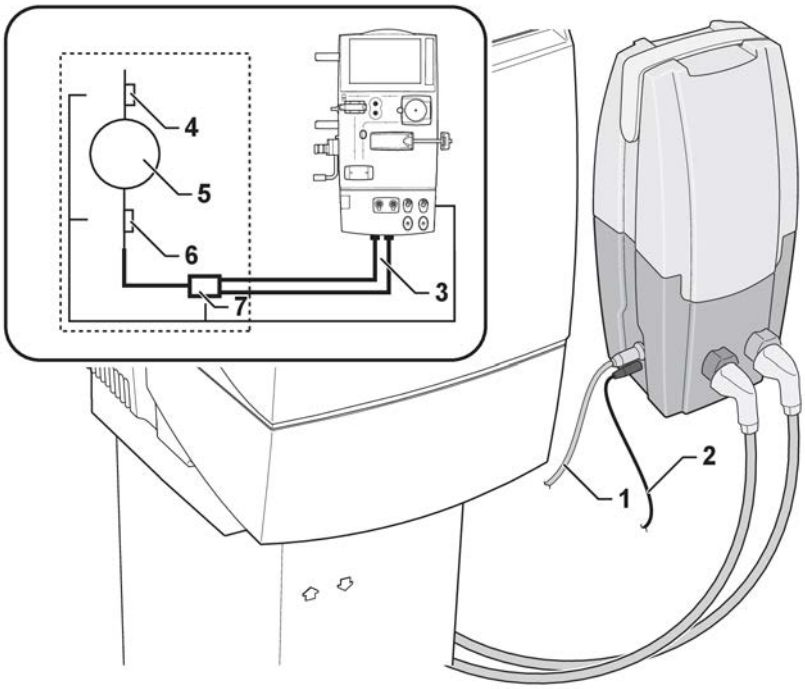

Figure 7-14. UF control calibration.

1. UF calibration cable
2. 24 V DC from power adapter
3. Flow in/out
4. High Level
5. V. ref.
6. Low level
7. UFVA

The equipment contains a reference volume, a flow directing valve (UFVA) and electronics. The UF calibration station controls the directing valve by measuring low level and high level of the reference volume and depending on the selected UF mode the valve will become closed or opened when low or high level is detected.

Table 7-3. Measuring low level and high level of the reference volume

Low Level fill up.	The reference is filled just over the first level transducer.
Low Level drain.	The reference is emptied just below the first Level transducer.
High Level fill up.	The reference is filled to just over the second level transducer.
High level drain.	The reference is emptied just below the second Level transducer.

7.4.2 Complete mode

7.4.2.1 UF control calibration in Complete mode

Before you begin

NOTE!
The AK 98 dialysis machine shall be completely shut off. All electrical connections used for the the calibration procedure shall be completed before the power for the AK 98 dialysis machine is turned on.

NOTE!
If the machine is equipped with an ultrafilter, let the AK 98 dialysis machine pass functional check (wait for green fluid path) before entering Service mode.

NOTE!
The UF calibration station should be placed so that the dialyzer connectors are at the same level (height) as the dialyzer connectors on the AK 98.

Procedure

1) Connect the UF calibration station to the AK 98 dialysis machine external communication port. Use the UF calibration cable, K21876001.
2) Connect the UF calibration unit to the mains via the power adapter.
3) Start the AK 98 dialysis machine with the main switch and the **On/Off** button.
4) Place B-pickup tube in the A-concentrate container.
5) Enter `Service` mode, see Section 5.1.3 “Enter service or preset mode” on page 123.
6) Press `Calibration`.
7) Press `Transducers`.
8) Press `UF complete calibration`.
9) Connect the dialysis fluid tubes to the UF calibration box.
10) Press `Set Reference Volume` and set the reference value. (The Reference volume is labelled on the UF Calibration unit).
11) Press `OK`.
12) The calibration is now performed automatically and the calibration factor is stored.

    If the calibration is to be aborted without saving the new calibration values: Press `Cancel`.

7.4.2.2 During the UF control calibration

The time since the calibration was started is shown on the screen.

The screen also shows the different stages during the calibration:

- **E^2PROM test:**

  The E^2PROMS are tested in case there is a communication error with the UF cell.
- **Fluid preparation:**

  The AK 98 dialysis machine awaits that the fluid is correct in temperature and conductivity (37 °C and 14.4 mS on the B Cell)

- **Low and High level fill up:**

  During this period the reference volume is filled and emptied, this is done to check that the tool is working properly.
- **UF stabilization:**

  During this period the fluid path is heated up so there is no temperature drift in the components.
- **Main flow offset calibration:**

  During this period the offset on both channels is measured and saved in RAM memory. The test is performed in the same way as during taration.
- **Ch1 flow calibration:**

  The valves are set so the flow will go through Ch1 until the reference volume is filled. Since the reference volume is known, the flow can be calculated. This value is used to calculate a new coefficient for Ch1 so the measured volume match the actual volume. The new coefficient for Ch1 is saved in RAM and used in the next test.
- **Differential flow calibration:**

  The new coefficient (Ch1) is used when Ch2 coefficient is calculated by running the same flow through both channels. i.e. the same as differential flow in taration.
- **Verifying calibration of UF cell:**

  The verification is done by draining the reference volume through Ch2. Since the reference volume is known, the accuracy of the UF measuring system is measured.
- **Verifying calibration of Isolated UF:**

  The reference volume is then filled through Ch2, the flow is backwards through the cell, negative value on Ch2. When it is filled it is emptied just through Ch2 and the volume is measured by Ch2 only and the UF cell is checked for accuracy during Isolated UF.

7.4.2.3 When the automatic UF control calibration is finished

After calibration, the AK 98 dialysis machine continues to store the calculated values.

When the storage is completed, the verification results are displayed.

Table 7-4. The table shows an example with results after completed UF complete calibration.

Storage of values completed	
Time elapsed	00:47:05
Set Reference Volume	981.8 mL
UF Volume	972.3 mL (-1.0%)
Isol. UF Vol.	980.3 mL (-0.2%)
Fluid flow	0 mL/min
UFR (tolerance)	-0.005689
UFR (offset)	30.153 mL/min
Ch1 (scale/offset)	0.982 / -10.400 mL/min
Ch2 (scale/offset)	0.977 / 19.693 mL/min

! **NOTE!**
Perform a Rinse before leaving the AK 98 dialysis machine.

7.4.2.4 If the calibration is out of limits

If the calibration is out of limits then it will be displayed as calibration failed.

The maximum limits are:

- UF volume deviation ±1.0%
- Isolated UF volume ±1.0%

NOTE!
The other values such as offset and coefficients can be found in the GXL menu for UF Calibration logging:

For Ch1 and Ch2 Offset ±500 Coefficient 0.92-1.02

7.4.2.5 To disconnect the UF calibration box

Procedure

1) Press the AK 98 dialysis machine **On/Off** button.
2) Turn off the AK 98 dialysis machine with the main switch.
3) Disconnect the UF calibration box from the mains power.

7.4.3 Internal mode

7.4.3.1 UF control calibration in Internal mode

NOTE!
Select Intern for an internal calibration (taration but updating the E^2PROM instead of RAM). This is done without the external UF calibration equipment connected to the AK 98 dialysis machine.

Procedure

1) Start the AK 98 dialysis machine.
2) Place B-pickup tube in the A-concentrate container.
3) Enter `Service` mode, see Section 5.1.3 “Enter service or preset mode” on page 123.
4) Press `Calibration`.
5) Press `Transducers`.
6) Press `UF Internal calibration`.
7) Press `Start`.

Results

Internal UF control calibration runs automatically until the calibration is finished.

If the calibration is to be aborted without saving the new calibration values, press `Cancel` and then `Confirm`.

7.4.4 Verify mode

7.4.4.1 UF control calibration in Verify mode

Before you begin

> **NOTE!**
> The AK 98 dialysis machine shall be completely shut off. All electrical connections for the calibration procedure shall be completed before the power for the AK 98 dialysis machine is turned on.

> **NOTE!**
> If the machine is equipped with an ultrafilter, let the AK 98 dialysis machine pass functional check (wait for green fluid path) before entering Service mode.

> **NOTE!**
> The UF calibration station should be placed so that the dialyzer connectors are at the same level (height) as the dialyzer connectors on the AK 98.

Procedure

1) Connect the UF calibration station to the AK 98 dialysis machine external communication port. Use the UF calibration cable, K21876001.
2) Connect the UF calibration unit to the mains via the power adapter.
3) Start the AK 98 dialysis machine with the main switch and the **On/Off** button.
4) Place B-pickup tube in the A-concentrate container.
5) Enter `Service` mode, see Section 5.1.3 “Enter service or preset mode” on page 123.
6) Select `Calibration`.
7) Press `Transducers`.
8) Press `UF Verify calibration`.
9) Connect the dialysis fluid tubes to the UF calibration box.
10) Press `Set Reference Volume` and set the reference value. (The Reference volume is labelled on the UF Calibration unit).
11) Press `OK`.
12) The calibration is now done automatically and the calibration factor is stored.

    If the calibration is to be aborted without saving the new calibration values, press `Cancel`.

7.4.4.2 During the verification of the UF control calibration

The time display shows the time since the verification was started.

The Information fields also shows the different stages during the verification:

- **E²PROM test:**
  The E²PROMS are tested in case there is a communication error with the UF cell.
- **Fluid preparation:**
  The AK 98 dialysis machine awaits that the fluid is correct in temperature and conductivity (37°C and 14.4 mS on the B Cell)

- **Low and High level fill up:**

  During this period the reference volume is filled and emptied, this is done to check that the tool is working properly.
- **UF stabilization:**

  During this period the fluid path is heated up so there is no temperature drift in the components.
- **Main flow offset calibration:**

  During this period the offset on both channels is measured and saved in RAM memory. The test is performed in the same way as during taration.
- **Ch1 flow calibration:**

  The valves are set so the flow will go through Ch1 until the reference volume is filled. Since the reference volume is known the flow can be calculated. This value is used to calculate a new coefficient for the Ch1 so the measured volume match the actual volume. The new coefficient for Ch1 is saved in RAM and used in the next test.
- **Differential flow calibration:**

  The new coefficient (Ch1) is used when the Ch2 coefficient is calculated by running the same flow trough both channels. i.e. the same as differential flow in taration.
- **Verifying calibration of UF cell:**

  The verification is done by draining the reference volume through Ch2. Since the reference volume is known, the accuracy of the UF measuring system can be measured.
- **Verifying calibration of Isolated UF:**

  The reference volume is then filled through Ch2, the flow is backwards through the cell, negative value on Ch2. When it is filled it is emptied just through the Ch2 and the volume is measured by Ch2 only and the UF cell is checked for accuracy during Isolated UF.

7.4.4.3 When the verification of the UF control calibration is finished

When the verification is completed, the AK 98 dialysis machine displays the results:

Table 7-5. The table shows an example with results after completed UF Verify calibration.

UF calibration verified	
Time elapsed	00:36:56
Set Reference Volume	981.8 mL
UF Volume	972.3 mL (-1.0%)
Isol. UF Vol.	980.3 mL (-0.2%)
Fluid flow	0 mL/min
UFR (tolerance)	-0.005689
UFR (offset)	30.153 mL/min
Ch1 (scale/offset)	0.982 / -10.400 mL/min
Ch2 (scale/offset)	0.977 / 19.693 mL/min

! **NOTE!**
Perform a Rinse before leaving the AK 98 dialysis machine.

7.4.4.4 To disconnect the UF calibration box

Procedure

1) Press the AK 98 dialysis machine **On/Off** button.
2) Turn off the AK 98 dialysis machine with the main switch.
3) Disconnect the UF calibration box from the mains power.

7.4.5 Clock

7.4.5.1 To set the time

Procedure

1) Enter `Service` mode, see Section 5.1.3 “Enter service or preset mode” on page 123.
2) Select the `Calibration` tab.
3) Press `Clock`.
4) Adjust date and time.

7.4.6 Touch Screen

7.4.6.1 To calibrate the touch screen

Procedure

1) Enter `Service` mode, see Section 5.1.3 “Enter service or preset mode” on page 123.
2) Select the `Calibration` tab.
3) Press `Touch calibration`.
4) Press `Start`.
5) Carefully press and briefly hold your finger on the center of the target that appears in the middle of the screen. Repeat as the target moves around the screen.
6) The calibration settings have been measured. Tap the screen within 30 seconds to register saved data.

   To cancel saved data and keep the current settings wait for 30 seconds.

8 Maintenance manual

8.1 General

8.1.1 Preventive maintenance procedures

WARNING!
The initial installation, start up procedure, and maintenance of the AK 98 dialysis machine may only be performed by the Gambro Technical Service organization or a person authorised by Gambro, fulfilling the specified qualifications stated in Section 1.7 "Competence of an authorised service technician" on page 13.

To ensure proper operation of the AK 98 dialysis machine, a qualified service technician shall perform a complete series of preventive maintenance procedures at regular intervals.

The preventive maintenance procedures have been devised to require a minimum of time while ensuring that the machine is maintained in optimum operation condition.

Included in the preventive maintenance procedures are checks to verify normal machine operation. Should the machine fail to pass any of these tests, repair or calibration might be needed, then repeat the tests until the specifications are met.

It is mandatory to perform at least a preventive maintenance every second year.

A yearly maintenance is recommended. The rate of preventive maintenance might be different due to variations of the operating environment.

The AK 98 dialysis machine will perform as designed only if it is used and maintained in accordance with Gambro's instructions.

Any warranties made by Gambro with respect to the AK 98 dialysis machine are void if the equipment is not used in accordance with the instructions provided. Gambro will not accept responsibility for any damage or injury resulting from improper use or maintenance or unauthorised repair.

To fulfil the preventive maintenance procedures for the AK 98 dialysis machine, some parts shall be exchanged. The necessary parts to be exchanged are available in a Base-kit and three complementary kits:

- Base-kit: K40429001
- A-kit: K40430001, includes exterior parts
- B-kit: K40431001, overhauling service kit (with separate valve membranes)
- C-kit K40432001, overhauling service kit (with complete 2- and 3-way valves)

CAUTION!
After maintenance a disinfection program shall be performed before a treatment is performed.

NOTE!
The following maintenance kits are designed to be used with the AK 98 dialysis machine:

- Base-kit: K40429001
- A-kit: K40430001
- B-kit: K40431001
- C-kit: K40432001

NOTE!
All parts in the A-kit are possible to exchange without opening the dialysis machine.

NOTE!
The contents of the B-kit is the same as the contents of the C-kit with one exception; the C-kit contains complete 2- and 3-way valve housings instead of separate valve membranes.

Therefore either select the B-kit or the C-kit. Select the one that meets your specific need.

NOTE!
When performing preventive maintenance procedures or calibrations, which require access to the interior of the machine, you must have proper electrostatic safety devices (i.e. wrist grounding straps or grounding mats) in place to prevent damage to electrostatic sensitive components within the machine.

NOTE!
During repair of any of the parts in the flow path, special care must be taken and good hygiene maintained.

NOTE!
Checklists are provided in the Spare Parts Instruction that is included in each maintenance-kit. The purpose of these checklists is to record the work done.

8.1.2 How to open the machine

8.1.2.1 Opening illustration

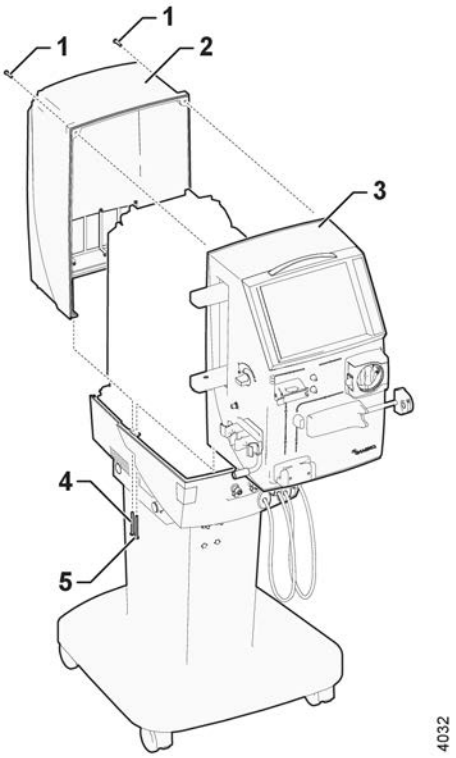

8.1.2.2 How to remove the rear cover

Procedure

1) Remove the two screws (1).

2) Remove the two screws (4).

3) Move the rear cover (2) backwards.

8.1.2.3 How to remove the Blood Monitor (BM)

Procedure

1) Remove the two screws (1).

2) Remove the two screws (5).

3) Move the BM (3) forwards.

8.2 Test equipment

Table 8-1. Test equipment needed to perform maintenance

Test equipment	Tolerance	Manufacturer	Gambro order number
Conductivity measurement	±0.1 mS/cm	MESA, IBP	N/A
Pressure measurement	±2 mmHg to ±200 mmHg	MESA, IBP, Druck	N/A
Teperature measurement	±0.2°C	MESA, IBP	N/A
Digital voltmeter	±0.5%	Fluke	N/A
Meassuring glass	±5 ml	N/A	N/A
Blood leak Calibration cover	N/A	Gambro	K40420002
Gauge pin kit for blood pump rollers (including three different pins)	T = 1.1 (Stop pin = 1.1*2*0.7 = 1.5 mm) T = 1.6 (Stop pin=1.6*2*0.7 = 2.2 mm) T = 2.0 (Stop pin = 2.0*2*0.7 = 2.2 mm) T = wall thickness of blood tubing	Gambro	K40158001
Calibration tube kit	N/A	Gambro	K13983002
Drip chamber	N/A	N/A	N/A
Tuber for calibration of priming detector	N/A	N/A	N/A
Safety tester	According to IEC 60601-1	Rigel, Biotec, Metron, Fluke	N/A
*BPM test equipment	N/A	Gambro	K22151001
Magnet for blood pump cover	N/A	Gambro	K19049001
*** If installed**			

8.3 Water inlet tube disinfection

Before you begin

The water inlet tube between the water supply system and the tube into the AK 98 dialysis machine up to the recirculation valve (REVA) is not automatically disinfected

by the local disinfection program. It requires integrated disinfection, together with the water delivery system, or a manual disinfection procedure.

CAUTION!
Always use a peracetic disinfectant for both the machine and the inlet tube. Mixing different types of disinfectants may be hazardous.

CAUTION!
Disinfectants may be toxic. Take note of necessary precautions before use. The manufacturer's instructions and recommendations shall be followed. Local regulations regarding the utilization of the different chemicals shall be followed.

It is recommended to perform disinfection of the inlet part of the dialysis machine if the machine is stored or switched off for a long period of time. The following procedure can be used to disinfect the inlet part if integrated disinfection with the water treatment system is not possible.

Procedure

1) Assemble the manual disinfection device as shown in Figure 8-1 "Manual disinfection device" on page 185. Contact your local **Gambro Service representative** for information on how to obtain this device or the components to assemble it.

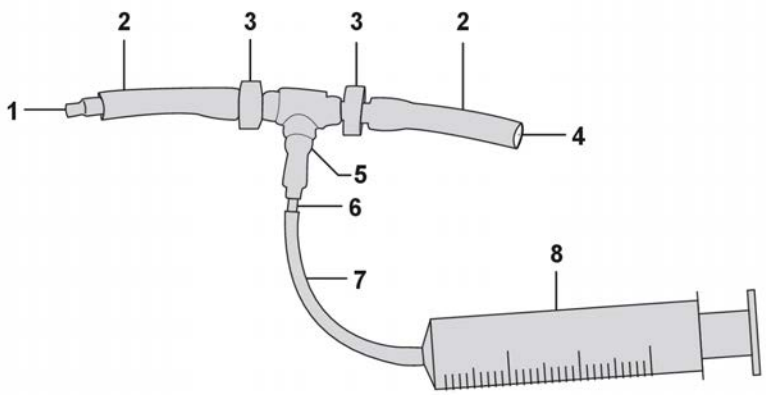

Figure 8-1. Manual disinfection device

1. Adaptor for the connection to the water inlet tube.
2. PVC tube 4.6/6.8 mm.
3. Non-return valve.
4. Disinfectant suction.
5. Silicone 'T' connector.
6. Nipple 3/6 mm.
7. PVC tube 3.5/5.5 mm.
8. 50 ml syringe.

2) Prepare a diluted peracetic (Dialox) solution of 2 ml peracetic/50 ml treated water in a chemical resistant container (see Table 8-2 "Peracetic solution table" on page 186).

Table 8-2. Peracetic solution table

Water inlet tubing length (m)	Treated water (ml)	Peracetic (Dialox) solution (ml)
1	200	8
2	250	10
3	300	12
4	350	14
5	400	16
6	450	18
7	500	20
8	550	22
9	600	24
10	650	26

NOTE!
The Table 8-2 "Peracetic solution table" on page 186 shows the minimum amount of disinfectant solution to administer for the specified inlet tube length. Table values are calculated for an inlet tube with an inner diameter of 8mm. Adjust volume accordingly for other inlet tube diameter, allow an additional 150 ml for the machine.

NOTE!
The prepared disinfectant solution shall be used immediately.

3) Switch the machine on.

4) Press the `Disinfection` button.

5) Select the `Chemical` tab.

6) Press `Perace`.

   The following attention is generated:

```
520 Concentrate tube A is out of position
Check the position.
```

7) Connect the disinfectant. From the **front** of the machine: connect the **blue** concentrate connector to the **yellow** pick-up tube.

8) Place the pick-up tube in the disinfectant solution.

9) Turn the water system supply off.

   The following attention is generated:

```
568 Inlet water pressure is too low
Check water supply.
```

10) Disconnect the machine's water tube from the water supply system and connect it to the connector on the manual disinfection device.

11) Insert the free end of the disinfectant suction tube of the manual disinfection device into the diluted peracetic disinfectant.

12) Use the syringe of the manual disinfection device to pump appropriate volume (see Table 8-2 "Peracetic solution table" on page 186) of diluted peracetic

disinfectant solution into the water inlet tube (the inlet tube shall be completely filled with disinfectant solution).

NOTE!
Point the syringe downward during the emptying phase to prevent air from entering the water inlet tube.

13) Leave the tube filled with disinfectant solution for 15 minutes.

14) Carefully disconnect the water inlet tube from the manual disinfection device.

15) Connect the water inlet tube to the water supply system and open the water tap.

16) The dialysis machine will continue the `Perace` program. Let the machine perform the complete disinfection program.

CAUTION!
After chemical disinfection procedure a test for residues shall be performed prior to connecting to a patient.

8.4 Preventive Maintenance: Base-kit

8.4.1 Parts in the Base-kit

The Base-kit (K40429001) includes all parts necessary to fulfil the mandatory preventive maintenance procedures for the AK 98 dialysis machine.

Table 8-3. Base-kit

Denomination	Part No.	Qty
Air filter, AC/DC	K23734002	1
Air filter, cover	K24358001	1
Particle filter, A- and B-connector	K16538A	2
O-ring, A- and B-connector (male)	K63278001	4
O-ring, A- and B-connector (female)	100319060	2
O-ring, Level detector (deaerating chamber)	100319054	1
O-ring, degassing chamber (top)	100319008	1
O-ring, dialyzer connectors	100319009	2
O-ring, ultrafilter holder (for UFD)	100319029	2
Square ring, ultrafilter holder (for UFD)	K14920001	1
Sample port for 6 mm tube	K20219002	1
O-ring, BiCart cartridge holder (upper and lower)	100319008	2
Particle filter, from BiCart cartridge holder	K16538A	1
O-ring, mixing chamber (top)	100319008	2
Label	K24092001	1

NOTE!
As a complement to the Base-kit, three additional kits are available; A-, B- and C-kit.

8.4.2 How to exchange the parts included in the Base-kit

Procedure

1) First perform a combined heat disinfection program with CleanCart C agent or liquid citric acid. Then perform a heat disinfection program in combination with CleanCart A agent or a Chemical disinfection program with sodium hypochlorite. Refer to the operator's manual for the AK 98 dialysis machine.

2) Change air filter, K23734002, in the AC/DC power supply.

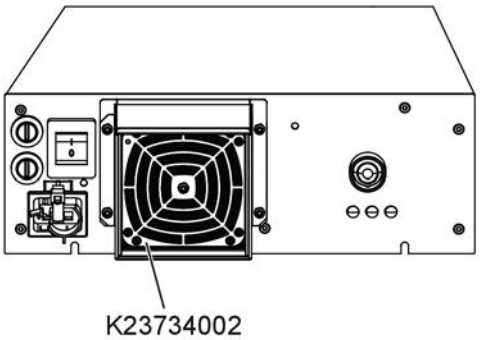

3) Change air filter, K24358001, in the rear cover of the AK 98 dialysis machine.

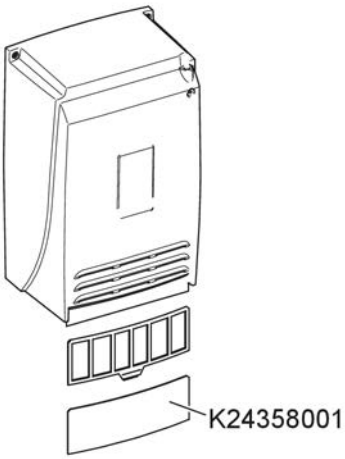

4) Change particle filters, K16538A, on the A- and B-connectors.

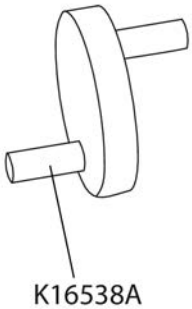

5) Change o-rings, K63278001, on the A- and B-connectors (male).

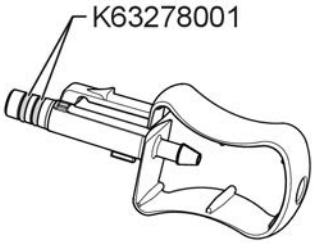

6) Change o-rings, 100319060, on the A- and B-connectors (female)

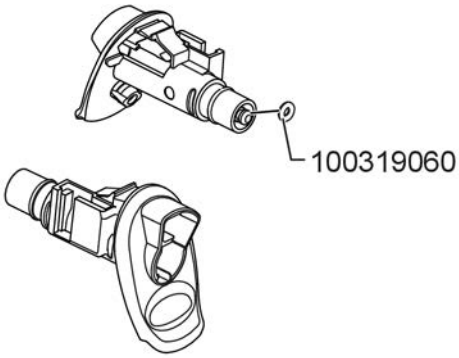

7) Change O-ring, 100319054, in the deaerating chamber.

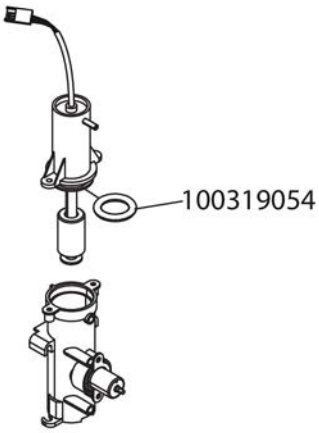

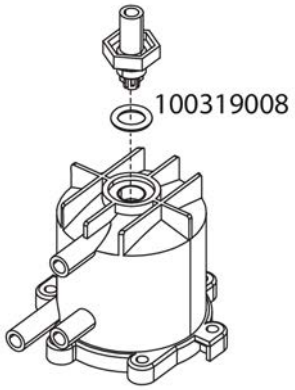

8) Change O-ring, 100319008, in the degassing chamber.

9) Change the O-rings, 100319009, in the dialyzer connectors.

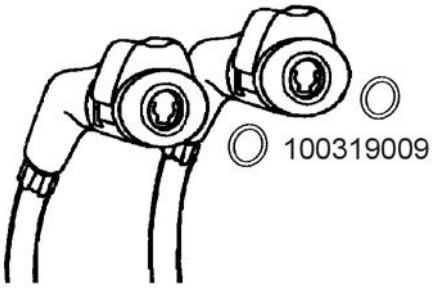

10) (Only for the AK 98 dialysis machine equipped with UFD-kit). Change the O-rings, 100319029, and square-ring, K14920001 in the ultrafilter holder.

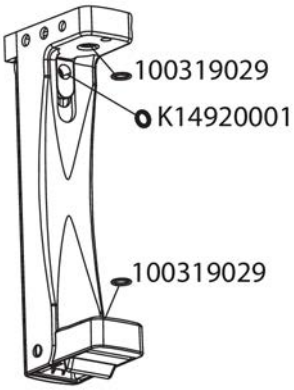

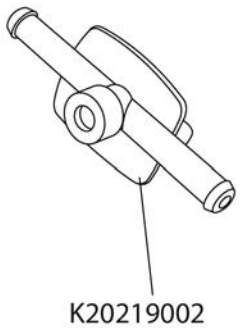

11) If installed: Change the sample port for 6 mm tube, K20219002.

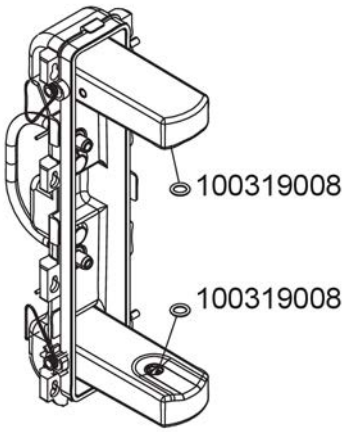

12) Change both o-rings, 100319008, in the BiCart cartridge holder (upper and lower).

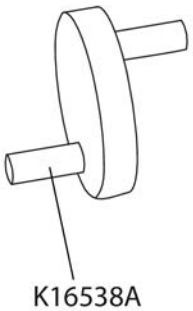

13) Change particle filter, K16538A, from the BiCart cartridge holder.

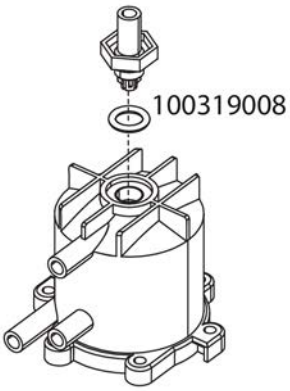

14) Change O-ring, 100319008, in the mixing chamber.

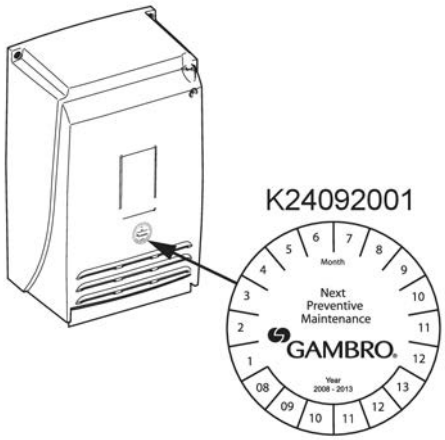

15) Mark month and year for the next scheduled preventive maintenance. Attach the label to the rear cover of the machine.

8.4.3 Actions to carry out after the parts in the Base-kit have been exchanged

Procedure

1) Check that the screws for the blood pump are tightened. (Both inside the BM and behind the blood pump rotor).
2) Check that the screws for the hose clamps on the water inlet and drain tube are tightened.
3) Check that the wheels are tightened.
4) Perform the Protective Earth Test (PET) according to instructions available in Section 9 "Electrical safety inspection" on page 211.
5) If connected, disconnect the cable K64897/K68678 (on RP 98) from the connector P202.
6) If connected, disconnect the cable K67217/K68679 (on RP 98) from the connector P203 on the display card K67455.
7) Check the protective earth resistance: Measure between TP594 (Z0VL) on the power I/O board and the metal on the heater rod.

   Measure in MΩ, should be > 1 MΩ. The machine shall be empty and switched off during measurement.

> **!** **NOTE!**
> Place the blood monitor on the fluid monitor.

8) Reconnect the cable K64897/K68678 (on RP 98) to the connector P202.
9) Reconnect the cable K67217/K68679 (on RP 98) to the connector P203 on the display card K67455.
10) BPM-test

    (Only for the AK 98 dialysis machine equipped with BPM)

    a) *BPM sub-tests*

    - Air leakage test: measures that the equipment is airtight.
    - Pressure test: Check of pressure transducer calibration.
    - Inflation speed test: measures the time to fill the cuff with air.

Each of the tests can be carried out separately but the above order for carrying out the sub-tests is recommended.

Check that the results from the sub-tests not exceed following limits:

Maximum deviation from reference to be within ±3 mmHg.

50 ±3 mmHg

150 ±3 mmHg

250 ±3 mmHg

b) *Test method: Air leakage test and Inflation speed test*

- Start the AK 98 dialysis machine with the main switch and the **On/Off** button.
- Enter `Service` mode.
- Select the `Diagnose` tab.
- Press `Blood module`.
- Press `BPM`.
- Before entering the Air leakage test mode or Inflation speed test mode, attach BPM cuff, 110350, tight to the BPM test equipment, K22151001.

c) *Check of air leakage*

By entering this test mode the air leakage for the BPM module, cuff hose and cuff will be tested automatically.

Before entering the test mode, cuff and cuff hose must be connected to the AK 98 dialysis machine. The cuff must be tightly wrapped around the BPM test equipment.

BPM test equipment is used to simulate the patient arm circumference. The air leakage is only tested for 90 seconds but the value is recalculated for 3 minutes.

If the displayed value is above 18 mmHg / 3 minutes, this indicates that there is a possible air leakage in the system.

It is of course also possible to perform this test without the cuff and cuff hose connected, but then the test will only check for air leakage within the AK 98 dialysis machine. In this case replace the cuff and cuff hose by a tube, which is closed.

d) *Check of inflation speed*

By entering this test mode the capacity for the pump within the module will be tested automatically. Before entering the test mode, cuff and cuff hose must be connected to the AK 98 dialysis machine.

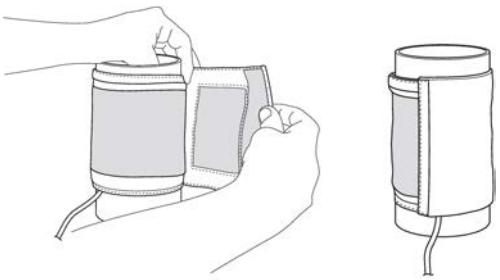

The cuff must be tightly wrapped around the BPM test equipment. If the displayed time is above 11 seconds, this test indicates that the pump is worn-out.

e) *Test method: Pressure transducer test*

- Start the AK 98 dialysis machine with the main switch and the **On/Off** button.
- Enter `Service` mode.
- Select the `Diagnose` tab.
- Press `Blood module`.
- Press `BPM`.
- Before entering the Pressure transducer test mode, connect the Gambro reference instrument together with a calibration tube set from kit K13983002 to the BPM connector on the AK 98 dialysis machine. No cuff and cuff hose to be connected.

NOTE!
The pressure transducer calibration tube kit shall be drained before being connected, to make sure that no fluids or particles enters the BPM connector or tubing's. This might otherwise damage or destroy the sensitive BPM sensors.

NOTE!
The BPM is equipped with an overpressure protection. It is activated for pressures above 300 mmHg.

NOTE!
The pressure transducer test is to be performed within approx. 2 minutes. Then the pressure is automatically released.

f) *Check of pressure transducer calibration and measured pressure*

- Enter the Pressure transducer test mode. When "`Current pressure: xxx mmHg`" is displayed it is possible to start applying the external reference pressure.
- Apply a pressure of 50 mmHg. Check deviation from reference pressure instrument for displayed value is 50 ±3 mmHg.
- Apply a pressure of 150 mmHg. Check deviation from reference pressure instrument for displayed value is 150 ±3 mmHg.
- Apply a pressure of 250 mmHg. Check deviation from reference pressure instrument for displayed value is 250 ±3 mmHg.
- Apply a pressure of 280 mmHg and slowly increase the pressure until the BPM reaches its overpressure point. Check that the overpressure point is at 300 mmHg (±20 mmHg).

11) Priming detector calibration

a) Start the AK 98 dialysis machine with the main switch and the **On/Off** button.

b) Enter `Service` mode, see Section 5.1.3 "Enter service or preset mode" on page 123.

c) Select the `Calibration` tab.

d) Press `Transducers`.

e) Press `External flow support`.

f) Press `Priming detector` from the selection diagram.

g) Insert an empty reference tube in the priming detector. The reference tube shall be from the same type of blood line as used during treatment.

h) Press Save.

i) The calibration is now done automatically and the calibration factor is written into the EEPROM.

NOTE!
If a calibration error is detected, the calibration shall be restarted, or the priming detector replaced.

12) Control of the blood pump occlusion

Check surface on the roller at the pump rotor, if it is damaged exchange the unit. The roller unit should easily go back to upper end position when it has been pressed down to end position, exchange unit if it gets stuck in any position.

The slides of the blood pump rotor shall be inspected for wear. Make sure that all slides are secure and not damaged.

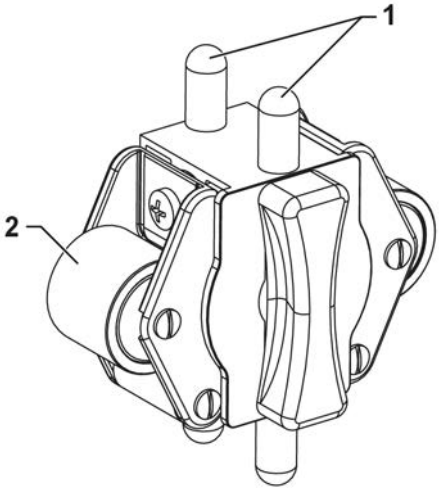

Figure 8-2. Blood pump rotor with slides (1) and roller (2)

NOTE!
If the pump segment has a different wall thickness, the occlusion of the pump shall be adjusted to the correct wall thickness.

Use following formula to calculate which gauge pin to use:

2 * wall thickness * 0.7 (mm)

Use the gauge pins (stop/go) available in the kit K40158001. The kit includes following three different gauge pins:

T = 1.1 (Stop pin = 1.1 * 2 * 0.7 = 1.5 mm)

T = 1.6 (Stop pin = 1.6 * 2 * 0.7 = 2.2 mm)

T = 2.0 (Stop pin = 2.0 * 2 * 0.7 = 2.8 mm)

T = wall thickness of the blood tubing

Check the range between the blood pump rollers and the path according to Figure 8-3 “Blood pump - - - = Measuring” on page 196.

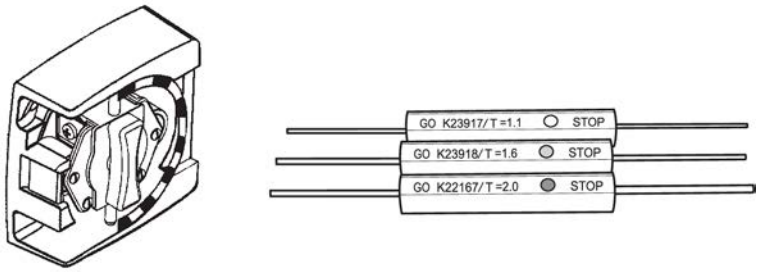

Figure 8-3. Blood pump - - - = Measuring

Adjust range between the blood pump rollers and the path if it is necessary.

The GO pin should barely pass within the calibrating area.

The STOP pin is NOT allowed to pass in any point within the calibrating area.

NOTE!
Put grease on the GO and STOP pins when not used and store gauge in plastic bag to prevent it from corroding.

13) Enter `Diagnose`/`Blood module`/`Pumps` and check that the blood pump stops when the cover is opened.

14) Blood pump overload test:

CAUTION!
Be careful to avoid injury caused by squeezing. Only grab the handle and do not put any fingers between the blood pump rollers/guides and the blood pump housing.

a) Start the blood pump and let it run at lowest possible speed.

b) Open the blood pump cover and place a magnet on the sensor for the cover (1).

c) Stop the blood pump rotor by manually grabbing the handle (2).

d) Check that the power to the blood pump motor is switched off within 2 seconds.

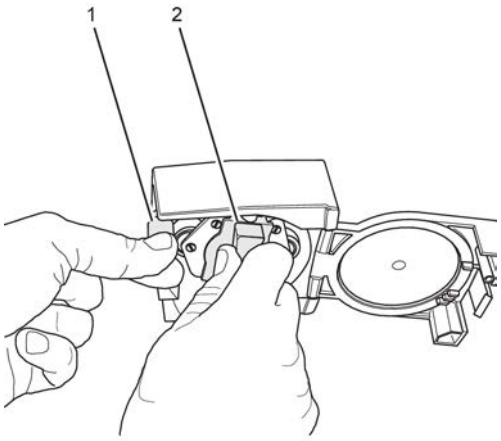

15) Enter `Service/Calibration/Transducers/External flow support`.

   a) Press `Arterial pressure transducer` to start the calibration routine.

   b) Make sure that nothing is connected to the transducer (zero pressure).

   c) Check zero level of the Arterial pressure transducer. Tolerance: ± 5 mmHg. Calibrate if necessary (see Section 7 “Calibrations” on page 151 for details).

16) Enter `Service/Calibration/Transducers/External flow support`.

   a) Press `Venous pressure transducer CPU P` to start the calibration routine.

   b) Make sure that nothing is connected to the transducer (zero pressure).

   c) Check zero level of the Venous Pressure Transducer.

      Tolerance: ± 5 mmHg.

      Calibrate if necessary (see Section 7 “Calibrations” on page 151 for details).

   d) Enter `Service/Calibration/Transducers/External flow support`.

   e) Press `Venous pressure transducer CPU C` to start the calibration routine.

   f) Make sure that nothing is connected to the transducer (zero pressure).

   g) Check zero level of the Venous Pressure Transducer.

      Tolerance: ± 5 mmHg.

      Calibrate if necessary (see Section 7 “Calibrations” on page 151 for details).

17) Check the zero level of the three pressure transducers:

   - Degassing pressure transducer
   - HPG pressure transducer
   - Pressure Dialysis, PD

   Tolerance: ±5 mmHg.

   Calibrate if necessary (see Section 7 “Calibrations” on page 151 for details).

> **!** **NOTE!**
> To reach atmospheric pressure in the transducer housing, disconnect the corresponding tube, refer to the AK 98 service manual Section 7 “Calibrations” on page 151.

18) Enter `Service` mode and enable the fluid path leakage test.

19) Blood leak detector:

> **NOTE!**
> In order to maintain stable temperature and to prevent disturbances caused by light admission, do not remove the BM during the calibration of the blood leakage detector.

a) Remove the blood leak detector cover. and clean the inside of the blood leak housing.

b) Mount a blood leak calibration cover. Make sure that the filter is in horizontal position, start the AK 98 dialysis machine.

c) Enter `Service` mode, see Section 5.1.3 “Enter service or preset mode” on page 123.

d) Select the `Calibration` tab.

e) Press `Transducers`.

f) Press `Internal flow support`.

g) Press `Blood leak detector`.

h) Let the machine stabilize for 15 minutes. No concentrate shall be used.

i) Press `Blood leak detector` to enter the blood leakage calibration routine.

j) Make sure that the filter is in **horizontal** position. The reference (Reference: 0) is automatically set to 0.

k) When the Blood leak value is stable, press `Save` in the Reference: 0 field.

l) Turn the calibration filter to **vertical** position. The reference (Reference: 100) is automatically set to 100.

m) When the blood leak value is stable, press `Save` in the Reference: 100 field.

n) Press `Save` to store the calibration values.

o) Enter `Service/Diagnose/System/Technical error support select/View technical errors`. Check if any 0504 020 xxx error codes are present in the error code buffer. If there are any, a full calibration of the UF cell is required in step 19. o.

p) Erase the error code buffers:

Enter `Service/Diagnose/System/Technical error support select/Erase technical errors`.

q) (Only if error codes 0504 020 xxx error codes were present in the error code buffer.)

Perform a full calibration of the UF cell according to the AK 98 service manual Section 7 “Calibrations” on page 151.

r) Drain the AK 98 dialysis machine and remount the standard blood leakage cover.

20) Drain the AK 98 dialysis machine and replace the blood leak calibration cover.

21) Attach pressure reference instrument before the heater. Use a silicon T-connector.

> **NOTE!**
> Be careful when opening the fluid tubes. Put a piece of paper around the tube connector to avoid leakage inside the monitor.

22) Let the machine pass functional check.

23) Use following settings:

Suitable mode (Bicarbonate)

UF

Temperature 37 °C

Conductivity 14 mS/cm

24) Run the machine for at least 15 minutes with the fluid passing through the measuring cell of the Reference Instrument before continuing with the check of functions and calibrations. Meanwhile, check the fluid path for air leakages, fluid leakages and salt deposits.

25) Adjust the second pressure regulator to 130±10 mmHg, before the heater, according to the AK 98 service manual Section 7 “Calibrations” on page 151.

26) Turn off the inlet water. Disconnect the silicone T-connector.

> **NOTE!**
> Be careful when opening the fluid tubes. Wait 30 seconds until the water pressure inside the machine is reduced. Put a piece of paper around the tube connector to avoid leakage inside the monitor.

27) Turn on the inlet water again and start the AK 98 dialysis machine.

28) Make sure that the blood monitor is placed on the fluid monitor.

29) Check the conductivity indications, at approximately 14 mS/cm.

Use GXL - fluid monitor screen and a reference instrument connected to the dialysis fluid tubes.

The indicated conductivity values (for conductivity cell P) in GXL should correspond to the indication on the reference instrument. The maximum deviation is ±0.3 mS/ cm.

30) Check the temperature indications, at approximately 37 °C. Use a reference instrument connected to the dialysis fluid tubes.

Set the temperature to 37 °C, wait 5 minutes and verify that the temperature in the dialysis fluid outlet tube from the machine is within the specification.

The maximum deviation from the set value is: +0.5/-1.5 °C (+1.0/-2.5 °C with UFD-kit installed).

If the deviation is more than the stated tolerance; the affected temperature transducer shall be exchanged.

31) Start the heparin pump.

32) Check the DC leakage between TP594 (Z0VL) on the power I/O board and the metal on the heater rod.

Measure in DC Voltage, should be < 1 V.

33) Place the blood monitor on the sideboard.

34) Check the DC leakage between TP594 (Z0VL) on the power I/O board and the cover of the suction pump motor.

Measure in DC Voltage, should be < 1 V.

35) Check the DC leakage between TP594 (Z0VL) on the power I/O board and the cover of the degassing pump motor.

Measure in DC Voltage, should be < 1 V.

36) Check the DC leakage between TP594 (Z0VL) on the power I/O board and the suction pump head.

Measure in DC Voltage, should be < 1 V.

37) Check the DC leakage between TP594 (Z0VL) on the power I/O board and the degassing pump head.

Measure in DC Voltage, should be < 1 V.

38) Simulated treatment

NOTE!
The following test procedure should preferably not be started or stopped during a taration of the UF-system. In this case there might be a small difference in volume.

NOTE!
All kind of fluid alarms (conductivity etc.) has to be avoided.

a) Simulate a venous pressure of approx. 60 mmHg by blocking the pressure port with a blocked piece of tubing and turning the level adjustment knob.

b) Insert the filled venous drip chamber in the air detector.

c) Press the `Fluid bypass` button (for bypass mode).

d) Connect a T-piece to the dialysis tubings.

Make sure that the tubing is long and thin enough to create a TMP of approx. 200±100 mmHg during the simulated treatment.

e) Press the `Fluid bypass` button (for direct mode).

f) Put the end of the tube in a measuring glass placed on the bottom tray.

NOTE!
The position of the measuring glass will affect the TMP.

g) Set the blood pump speed to 100 mL/min and start the blood pump.

h) Set minimum UF-rate to 0.0 L/h.

i) Make sure the measuring glass is filled to 1.00 L with water of 37.0°C.

j) Set a UF-volume of 0.9 L and treatment time of 1:00 h.

k) Check that the tube to the measuring glass is filled with water and all air bubbles are evacuated. Let the UF-rate stabilize.

l) Simulate blood in the priming detector with a piece of paper.

m) Make sure (again) that the measuring glass is filled to 1.00 l.

n) Press the `Save` button.

NOTE!
It is very important to do step 38.12-14 more or less simultaneously i.e. within seconds.

o) Check the residual volume at TIME = 0:00.

Approved residual volume: 100 mL +/- 50 mL

NOTE!
If the residual volume is outside the limits perform a full calibration of the UF cell according to AK 98 service manual Section 7 “Calibrations” on page 151.

39) Back-up battery Capacity-test

Conditions for the test:

- The back-up batteries must be fully charged, i.e. the mains plug shall have been connected to mains, with the mains switch on the power supply switched on, for at least 24 h before this test is to be done. The charge indicator on the power supply is lit when the AK 98 dialysis machine is equipped with back-up batteries.
- Continue the simulated treatment from step 38. The blood pump shall be running during this test.
- Fill the measuring cylinder with 1 L of water.

a) Disconnect the mains plug.

b) Let the machine run in simulated treatment for at least 15 minutes.

c) After 15 minutes, re-connect the mains plug.

NOTE!
After the Capacity-test the machine has to be re-charged. After 24 h the back-up batteries are fully re-charged.

If the machine stops within 15 minutes, re-connect the mains plug and exchange the backup-batteries.

40) Check that the overload protection on the heparin pump is working.

41) Check the arterial clamp by attaching the calibration tube set into the arterial clamp. Enter priming mode and create a level detector alarm to get the clamp closed. Apply a pressure of 600 mmHg. Check that the pressure does not fall more than 30 mmHg in 15 seconds.

42) Check the venous clamp by attaching the calibration tube set into the venous clamp. Enter priming mode and create a level detector alarm, by lowering the level in the drip chamber, to get the clamp closed. Apply a pressure of 600 mmHg. Check that the pressure does not fall more than 30 mmHg in 15 seconds.

43) Connect the mains plug to the outlet supply of an electrical safety tester.

Perform the Earth Leakage Test (ELT) and the Patient Earth Leakage Test (PLT) according to instructions available in Section 9 “Electrical safety inspection” on page 211.

44) Perform heat/chemical disinfection.

8.5 Preventive Maintenance: A-kit

8.5.1 Parts in the A-kit

The A-kit is designed to be used as a complementary addition to the Base-kit for the preventive maintenance procedures of the AK 98 dialysis machine.

The A-kit (K40430001) includes following exterior parts:

Table 8-4. A-kit

Denomination	Part No.	Qty
Air filter, AC/DC	K23734002	1
Air filter, cover	K24358001	1
Complete connector male (blue)	K64900002	1
Complete connector male (red)	K64900001	1
Complete dia tubing kit (blue)	K40373001	1
Complete dia tubing kit (red)	K40374001	1
Washer, blood pump rotor	K07316001	4
Pick-up tube, A (white)	100850007	1
Pick-up tube, B (blue)	100850008	1

! **NOTE!**
All parts in the A-kit are possible to exchange without opening the dialysis machine.

8.5.2 How to exchange the exterior parts included in the A-kit

Procedure

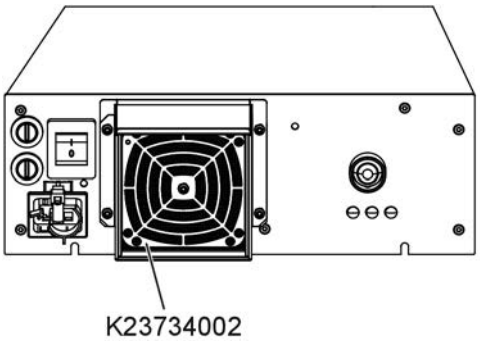

1) Change air filter, K23734002, in the AC/DC power supply.

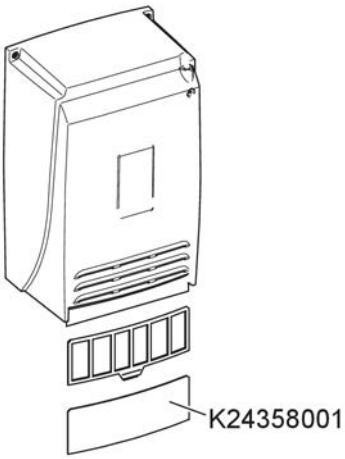

2) Change air filter, K24358001, in the cover of the AK 98 dialysis machine.

3) Change the complete male connectors:

- K64900002 (blue)
- K64900001 (red)

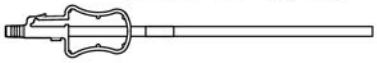

4) Change the complete dia tubings:

- K40373001 (blue)
- K40374001 (red)

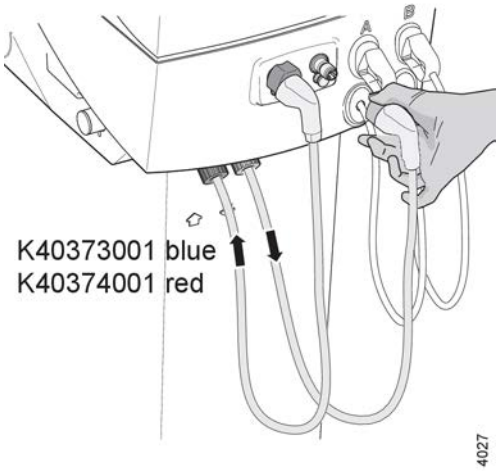

5) Add/change the washers, K07316001, for the blood pump rotors.

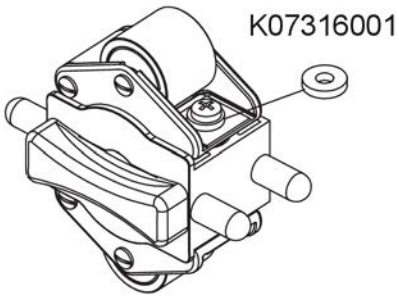

6) Change the pick-up tubes:

- Pick-up tube, A (white) 100850007
- Pick-up tube, B (blue) 100850008

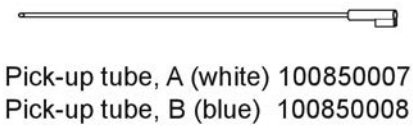

8.5.3 Actions to carry out after the parts in the A-kit have been exchanged

Procedure

1) First perform a heat disinfection program. Refer to the AK 98 operator's manual.
2) After the heat disinfection; re-tighten the nuts of the dialyzer connector set to the machine.

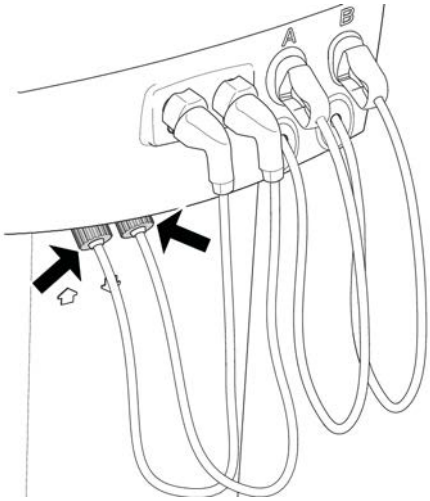

3) Let the machine pass functional check.
4) Control of the blood pump occlusion

   Check surface on the roller at the pump rotor, if it is damaged exchange the unit. The roller unit should easily go back to upper end position when it has been pressed down to end position, exchange unit if it gets stuck in any position.

   The slides of the blood pump rotor shall be inspected for wear. Make sure that all slides are secure and not damaged.

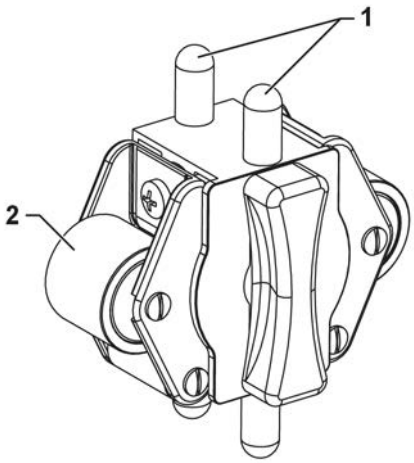

Figure 8-4. Blood pump rotor with slides (1) and roller (2)

! **NOTE!**
If the blood lines have a different wall thickness, the occlusion of the blood pump shall be adjusted to the right size.

Use following formula to calculate which gauge pin to use:

- 2 * wall thickness * 0.7 (mm)

Use the gauge pins (stop/go) available in the kit K40158001. The kit includes following three different gauge pins:

- T = 1.1 (Stop pin = 1.1 * 2 * 0.7 = 1.5 mm)
- T = 1.6 (Stop pin = 1.6 * 2 * 0.7 = 2.2 mm)
- T = 2.0 (Stop pin = 2.0 * 2 * 0.7 = 2.8 mm)

T = wall thickness of the blood tubing

Check the range between the blood pump rollers and the path according to Figure 8-5 “Blood pump. - - - = Measuring” on page 205.

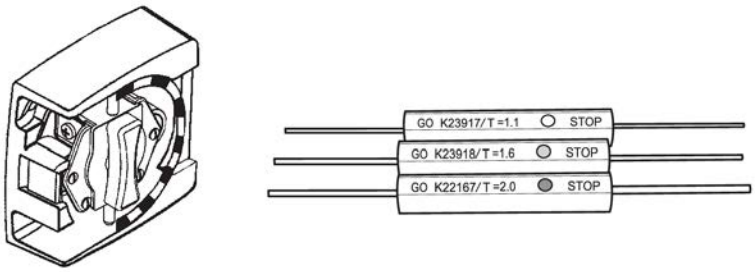

Figure 8-5. Blood pump. - - - = Measuring

Adjust range between the blood pump rollers and the path if it is necessary.

The GO pin should barely pass within the calibrating area.

The STOP pin is NOT allowed to pass in any point within the calibrating area.

NOTE!
Put grease on the GO and STOP pins when not used and store gauge in plastic bag to prevent it from corroding.

8.6 Preventive Maintenance: B- and C-kit

8.6.1 Parts in the B- and C-kit

The B- and C-kits are designed to be used as a complementary addition to the Base-kit for the preventive maintenance procedures of the AK 98 dialysis machine.

The B-kit, K40431001, and the C-kit, K40432001, includes following overhaul parts:

Table 8-5. B-kit, K40431001

Denomination	Part No.	Qty
Arterial pressure line (compl.)	K15168001	1
Venous line for level adjustment	K19459A	1
Valve house complete, degassing chamber	K16952A	1
Valve membranes	K08056C	9
Spike kit, BiCart cartridge holder (lower)	K21557006	1
Spike kit, BiCart cartridge holder (upper) incl. non return valve	K23031004	1

Table 8-6. C-kit, K40432001

Denomination	Part No.	Qty
Arterial pressure line (compl.)	K15168001	1
Venous line for level adjustment	K19459A	1
Valve house complete, degassing chamber	K16952A	1
Complete 2-way valves	K15235A	7
Complete 3-way valves	K21139002	2
Spike kit, BiCart cartridge holder (lower)	K21557006	1
Spike kit, BiCart cartridge holder (upper) incl. non return valve	K23031004	1

! **NOTE!**
The contents of the B-kit is the same as the contents of the C-kit with one exception; the C-kit contains complete 2- and 3-way valve housings instead of separate valve membranes. Therefore either select the B-kit or the C-kit. Select the one that meets your specific need best.

8.6.2 How to exchange the parts included in the B- and C-kit

Procedure

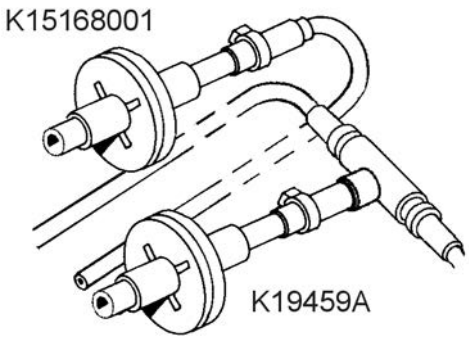

1) Change both the venous and arterial pressure monitoring line, including disc filter. Arterial line: K15168001 Venous line for level adjustment: K19459A

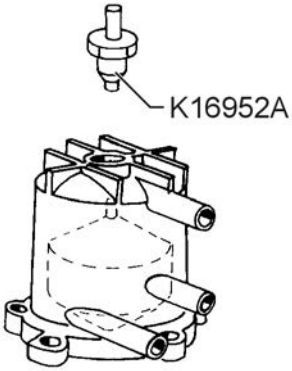

2) Change the valve house complete, K16952A, on the degassing chamber.

3) Complete valves / valve membranes

- **B-kit only!**

  Change valve membranes, K08056C, for following valves: AIVA, CBVA, CHVA, ZEVA, DIVA, BYVA, TAVA, EVVA and FLVA. See Section 8.6.3.2 “Valve mounting tool K15391C” on page 208.

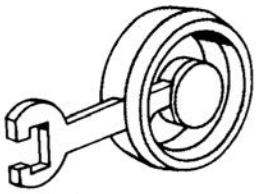

K08056C

- **C-kit only!**

  Change following complete 2-way valves, K15235A: AIVA, CHVA, ZEVA, DIVA, BYVA, TAVA and EVVA.

K15235A

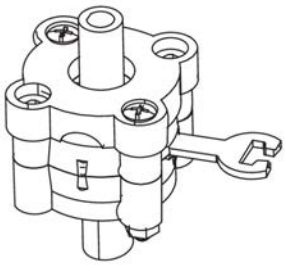

- **C-kit only!**

  Change the complete 3-way valve, K21139002, for CBVA and FLVA.

K21139002

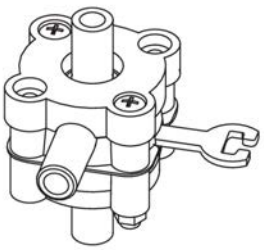

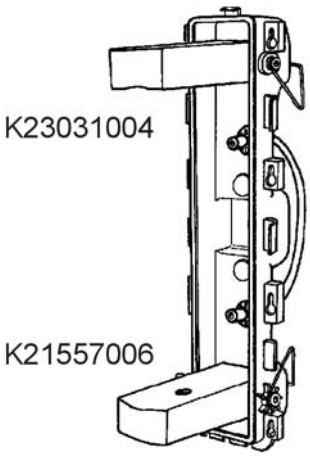

4) (Only for the AK 98 dialysis machine equipped with BiCart cartridge holder) Change both the upper and the lower spike kit in the BiCart cartridge holder. Assemble according to machine configuration.
   - K23031004 (Upper)
   - K21557006 (Lower)

8.6.3 Valve membranes

8.6.3.1 Replacing valve membranes

Correct assembly procedure of the housing and membrane is essential for proper function and preventing future leaks.

Procedure

1) Place the membrane in the valve housing with the seam on the periphery of the silicone membrane facing from the magnet of the valve, see picture below in Section 8.6.3.2 “Valve mounting tool K15391C” on page 208.
2) Tighten the screws with a torque of approximately 0.7 Nm. Make sure that self locking nuts are used.

Results

! **NOTE!**
Do not over tighten the screws, this will deform the valve housing and cause leakage.

8.6.3.2 Valve mounting tool K15391C

A special service tool for mounting of the valve membrane correctly in the valve housing is available.

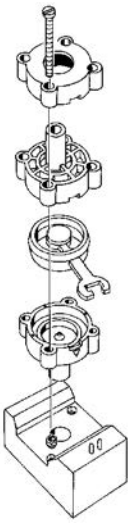

8.6.4 Actions to carry out after the parts in the B- and C-kit have been exchanged

Procedure

1) First perform a heat disinfection program. Refer to the AK 98 operator's manual.
2) Enter `Service` mode and enable the fluid path leakage test.
3) Let the machine pass functional check.

This page is intentionally left blank.

9 Electrical safety inspection

9.1 General

To ensure proper operation, a qualified service technician shall perform an Electrical Safety Inspection (ESI) of the dialysis machine at regular intervals. ESI should be performed at every maintenance service (Base-service) but also after replacements of some components in the dialysis machine according to the service manual, Section 6 “Replacements” on page 143.Additionally if the equipment has been exposed to unexpected electrical events on the main supply or unintentional ingress of fluid has occurred, a full Electrical Safety Inspection shall be performed. The information needed to perform ESI is provided in this instruction.

Included in the ESI procedures are checks to verify normal machine operation. Should the machine fail to pass any of these sub-tests, repair or calibration might be needed, then repeat the tests until the specifications are met.

Following sub-tests are included in the ESI of the dialysis machines:

- Visual inspection
- PET - Protective earth test
- ELT - Earth leakage current test
- PLT - Patient leakage current test

To avoid premature aging of isolation material no insulation test shall be performed during ESI. Spare parts dependent on insulation are tested at manufacturing and therefore no further test shall be performed with high voltage.

During the visual inspection of the equipment, the service engineer shall look for potential faults related to the electrical safety of the machine.

The purpose of the PET test is to verify that the protective earthed parts of the machine are properly connected to protective earth, providing a safe low electrical potential on these in case of insulation failure.

The purposes of the ELT/PLT tests are to verify that non-functional leakage currents to operator and patient are within safe limits.

When performing the ESI, which requires access to the interior of the machine, the service technician shall have proper electrostatic safety devices (i.e. wrist grounding straps or grounding mats) in place to prevent damage to electrostatic sensitive components within the machine.

During repair of any of the parts in the flow path, special care should be taken and a good hygiene should be kept.

Records for each sub-test are included in the end of this instruction. The purpose of these records is to document the work done and to trend the readings from the tests.

! **NOTE!**
If the machine is tested according to IEC 60601-1[1], this complies with the requirements in IEC 62353[2]

[1] IEC 60601-1: Medical electrical equipment - Part 1: General requirements for basic safety and essential performance.

[2] IEC 62353: Medical electrical equipment - Recurrent test and test after repair of medical electrical equipment.

9.2 Visual inspection

The visual inspection is an important part of the Electrical Safety Inspection of the dialysis machine.

The visual inspection is a procedure to make sure that the medical equipment in use still confirms the specifications and has not suffered from any external damage and/or contamination

Procedure

1) Exterior parts including covers: look for major damages, cracks etc.
2) Cabling: look for cuts, wrong connections etc.
3) Fuse rating: check correct values after replacement.
4) Markings and labelling: check the integrity.
5) Integrity of mechanical parts: check for any visual obstructions.

9.3 PET – Protective Earth Test

9.3.1 PET prerequisites

NOTE!
The machine shall not be connected to mains power during this test.

NOTE!
Limit values for PET-test according to IEC 62353.

9.3.2 Test equipment for PET

According to IEC 62353

9.3.3 for AK 98™

Check that the resistance between the protective earth connection of the mains plug and...

1. ...the exterior cover of the power supply...
2. ...the heater rod...
3. ...the mounting plate for the suction pump, measure on one of the screws,...
4. ...the mounting plate for the flow pump, measure on one of the screws,...
5. ...the mounting plate to the safety couplings for the dialysis fluid tubes...
6. ...the pressure regulator, PR1,...
7. ...the mounting plate to the water inlet/drain-nipples, measure on one of the screws,...
8. ...the mounting plate to the external communication port, measure on one of the screws,...
9. ...the mounting plate to the potential equalization connector, measure on one of the screws,...
10. ...the potential equalization connector...
11. ...the heparin pump (rear plate)...

...does not exceed 300 mΩ.

9.4 ELT/PLT

9.4.1 Test equipment for ELT / PLT

- Safety Tester, set to measure according to IEC 60601-1.
- PLT box K40246001.

9.4.2 General conditions for ELT / PLT

1. The dialysis machine shall be connected to both feed water and drain.
2. Perform the test with all enclosure parts of the machine assembled.
3. Connect the dialysis machine to the outlet supply of the safety tester. Use a mains plug adapter for respective mains plug. If the dialysis machine is equipped with two mains plugs, the measurements shall be performed for each mains plug and the values shall be added.

! **NOTE!**
To avoid damages on the safety tester, follow the instructions for the safety tester.

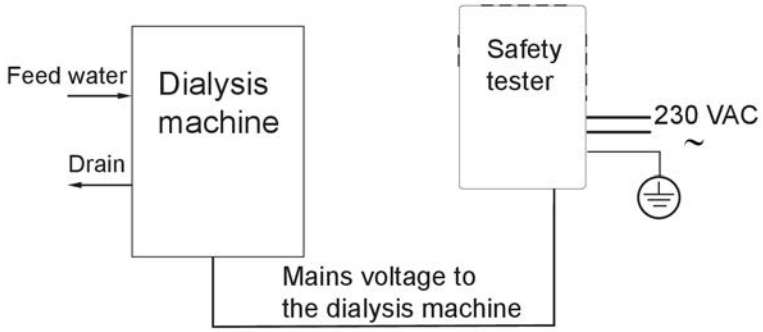

4. Central concentrate delivery systems should not be used. Use either liquid or non-liquid concentrates.
5. No other external equipment than specified in this instruction should be connected to the machine.
6. The protective earth of the machine shall not be in contact with any external protective earth.
7. No Potential Equalization cable shall be connected during test.

In the case of several machines are connected together in a system the sum of each machine ELT and PLT values shall be less than the maximum values shown in the tables.

9.4.3 ELT

9.4.3.1 Earth Leakage Current Test

Procedure

1) Let the machine pass functional check.

2) Measure the earth leakage current with the safety tester. Measure both in N.C. (Normal Condition) and S.F.C. (Single Fault Condition).

3) Take the highest reading when the machine is running.

4) Invert the phases of the mains voltage. The machine might restart.

5) Take the highest reading when the machine is running. Measure both in N.C. (Normal Condition) and S.F.C. (Single Fault Condition).

6) Check that the highest measured readings do not exceed the limit values in Section 9.4.3.2 "Limit values for earth leakage current (ELT)" on page 215

9.4.3.2 Limit values for earth leakage current (ELT)

ELT Limit values		
	N.C.	**S.F.C.**
AK 98 (115 V)	Max 500 µA	Max 1000 µA
AK 98 (230 V)		

9.4.4 PLT

9.4.4.1 Patient Leakage Current Test

Before you begin

NOTE!
Make sure that the machine does not perform a taration (self calibration) during the measurements.

Procedure

1) Let the machine pass functional check.

2) Connect the dialysis fluid tubes to the PLT box.

3) The access point on the PLT box shall be connected to the Safety Tester.

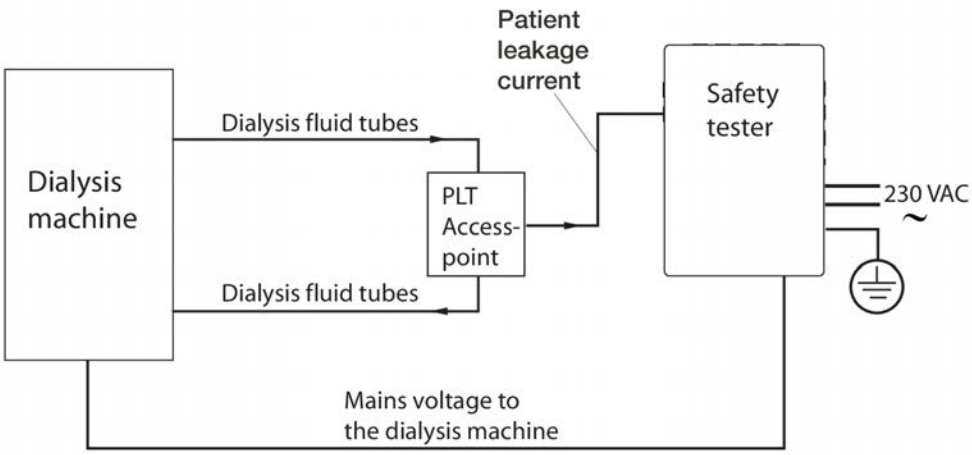

4) There must be a fluid flow during this test. Make sure that the fluid is not in bypass.

5) Measure the patient leakage current with the safety tester. Follow the user manual for the safety tester.

6) Measure both in N.C. (Normal Condition) and S.F.C. (Single Fault Condition).

7) Take the highest AC-reading when the machine is running.

8) Take the highest DC-reading when the machine is running.

9) Invert the phases of the mains voltage. The machine may restart.

10) Measure both in N.C. (Normal Condition) and S.F.C. (Single Fault Condition).

11) Take the highest AC-reading when the machine is running.

12) Take the highest DC-reading when the machine is running.

13) Check that the highest measured readings do not exceed the limit values in Section 9.4.4.2 "Limit values for patient leakage current (PLT)" on page 216.

9.4.4.2 Limit values for patient leakage current (PLT)

PLT Limit values				
	AC N.C.	**DC N.C.**	**AC S.F.C.**	**DC S.F.C.**
AK 98 (115 V)	Max 100* µA	Max 10 µA	Max 500 µA	Max 50 µA
AK 98 (230 V)				

NOTE!
For treatments with a central venous catheter (CVC), the patient leakage current shall be <10 µA AC at Normal Condition (N.C.).

9.5 Record of Electrical Safety Inspection

9.5.1 Machine type and identification

Machine type	
AK 98	□

Machine identification	
Product code	
Serial number	
Run time (h)	

Table 9-1. Visual inspection

Description	Approved check
A visual inspection of the dialysis machine has been performed without any remarks, according to the specified step instruction in Section 9.2 "Visual inspection" on page 213.	□

Remarks:

9.5.2 PET for AK 98™ dialysis machine

Check no	Description	Measured value	Approved check
	Check that the resistance between the protective earth connection of the mains plug and...		
1	...the exterior cover of the power supply...	……. mΩ	□
2	...the heater rod...	……. mΩ	□
3	...the mounting plate for the suction pump, measure on one of the screws,...	……. mΩ	□
4	...the mounting plate for the flow pump, measure on one of the screws,...	……. mΩ	□
5	...the mounting plate to the safety couplings for the dialysis fluid tubes...	……. mΩ	□
6	...the pressure regulator, PR1,...	……. mΩ	□
7	...the mounting plate to the water inlet/drain-nipples, measure on one of the screws,...	……. mΩ	□
8	...the mounting plate to the external communication port, measure on one of the screws,...	……. mΩ	□
9	...the mounting plate to the potential equalization connector, measure on one of the screws,...	……. mΩ	□
10	...the potential equalization connector...	……. mΩ	□
11	...the heparin pump (rear plate)...	……. mΩ	□
	...does not exceed 300 mΩ.		

9.5.3 ELT - Earth Leakage Current Test

Description	Measured value	Approved check
File the highest measured earth leakage current, normal condition (N.C.) reading according to Section 9.4.3 “ELT” on page 214.	……. µA	□
File the highest measured earth leakage current, single fault condition (S.F.C.) reading according to Section 9.4.3 “ELT” on page 214.	……. µA	□

9.5.4 PLT - Patient Leakage Current Test

File both the highest AC-reading and the highest DC-reading, when the machine is running, according to Section 9.4.4 “PLT” on page 215.

Description	Measured value	Approved check
File the highest measured patient leakage current, normal condition (N.C.) reading according to Section 9.4.4 “PLT” on page 215.	……. µA DC ……. µA DC	□ □
File the highest measured patient leakage current, single fault condition (S.F.C.) reading according to Section 9.4.4 “PLT” on page 215.	……. µA DC ……. µA DC	□ □

Compare with the measured leakage currents at the last[1] ESI and evaluate if the changes are approved or not for the next operational period of the machine. Write notes here:

_____

Name of testing organization	Date
Name of testing Service engineer	Signature

This record is to be signed and filed by the Service Engineer responsible for the Electrical Safety Inspection.

[1] If this is the ESI at installation please make comparison with the ”Production Summary” measured values supplied by the manufacturer at delivery of the machine.

10 Electrical Connections

10.1 Cable connection

AK 98 cable connection.

Table 10-1. Power I/O board K67460001

Contact number	Contact name	Cable	Cable name	Connected to	Components for Self-Care
P100	PSU	N/A	N/A	Power supply unit (22-pin connector)	N/A
P101	Battery	K68755001	POWER I/O BATTERY CONNECTIO N CABLE	Battery	N/A
P102	Button board	K68298001	POWER I/O FRONTBUTT ON CABLE	P5 on Button board	K68680001 and K68683001
P103	Front I/O board	K68296001	POWER CABLE TO FRONT I/O	P607 on Front I/O board	N/A
P104	General I/O board	K68297001	POWER CABLE TO GENERAL I/O	P509 on General I/O board	N/A
P107	Fan	N/A	N/A	Fan	N/A
P108	Valves	K66094001	POWER I/O VALVE CABLE	Valves according to cable markings (REVA, AIVA, RIVA, CHVA, TAVA, BYVA, DIVA, EVVA, ZEVA, FIVA, INVA, FLVA, CBVA, HBVA)	N/A
P109	Pumps	K66096001	POWER I/O PUMP CABLE	Flow and suction pump, variable flow motor and flow switch	N/A
P110	Heater and feeding pumps	K66095001	POWER I/O HEATER CONTROL CABLE	Feeding pumps A, B and P930, P934 on Relay Unit	N/A
P111	CAN (control and protective)	K68299001	CAN CABLE	P511 on General I/O and P608 on Front I/O	N/A
P112	Display board	N/A	N/A	P201 on Display board (no cable)	N/A
P113	External communicatio n	K66097001	POWER I/O EXT COM CABLE	Interface unit K64410001	Interface unit K64410002
P114	External USB	K68301001	USB CABLE	Interface unit K64410001	Interface unit K64410002

Contact number	Contact name	Cable	Cable name	Connected to	Components for Self-Care
P120	PSU MFI/, BFI/	N/A	N/A	Power supply unit (small 2-pin connector)	N/A
P121	PSU charger	N/A	N/A	Power supply unit (2-pin connector)	N/A
P151	Speaker	N/A	N/A	Speaker in lower position	N/A

Table 10-2. Display board K67455001

Contact number	Contact name	Cable	Cable name	Connected to	Components for Self-Care
P201	Power I/O	N/A	N/A	P112 on Power I/O board (no cable)	N/A
P202	LVDS	K64897001	LVDS CABLE	Display	K68678001 and K68681001
P203	Back light/Touch	K67217001	TOUCH BACK LIGHT CABLE	P2 on Button board	K68679001 and K68682001
P204	Speaker	N/A	N/A	Speaker in upper position	N/A
P205	Ethernet	K68300001	ETHERNET CABLE	Interface unit K64410001	Interface unit K64410002

Table 10-3. General I/O board K67430001

Contact number	Contact name	Cable	Cable name	Connected to	Components for Self-Care
P502	High Pressure Transducer (HPG)	N/A	N/A	High Pressure Transducer (HPG)	N/A
P503	Degassing Pressure Transducer	N/A	N/A	Degassing Pressure Transducer	N/A
P504	Regulation Temperature Transducer	N/A	N/A	Regulation Temperature Transducer	N/A
P505	Conductivity Cell A	K66090001	GENERAL I/O CONDCELL A CABLE	Conductivity Cell A	N/A
P506	Conductivity Cell B	K66091001	GENERAL I/O CONDCELL B CABLE	Conductivity Cell B	N/A
P507	UF Cell	K66093001	GENERAL I/O UF CELL CABLE	UF Cell	N/A
P508	Dia Scan	K66089001	GENERAL I/O DIASCAN CABLE	Dia Scan	N/A
P509	24V Input power	K68297001	POWER CABLE TO GENERAL I/O	P104 on Power I/O board	N/A

Contact number	Contact name	Cable	Cable name	Connected to	Components for Self-Care
P510	Control and Protective sensors	K66088001	GENERAL I/O SENSOR CABLE	Sensors according to cable markings (Bubble trap, Dia connectors (M SW), 12-13 SAGS, Pick-up tube A and B, 24-25 INPS)	N/A
P511	CAN (control and protective)	K68299001	CAN CABLE	P111 on Power I/O and P608 on Front I/O	N/A
P552	Dia Pressure Transducer	N/A	N/A	Dia Pressure Transducer	N/A
P553	Blood Leak Detector	N/A	N/A	Blood Leak Detector	N/A
P554	Conductivity Cell P	K66092001	GENERAL I/O CONDCELL P CABLE	Conductivity Cell P	N/A
P555	UF Supervision 1	N/A	N/A	UF Supervision 1	N/A
P556	UF Supervision 2	N/A	N/A	UF Supervision 2	N/A

Table 10-4. Front I/O board K67435001

Contact number	Contact name	Cable	Cable name	Connected to	Components for Self-Care
P602	Venous Pressure Transducer (Control)	N/A	N/A	Venous Pressure Transducer (Control)	N/A
P603	Arterial Pressure Transducer (Control)	N/A	N/A	Arterial Pressure Transducer (Control)	N/A
P605	Blood Pressure Monitor (BPM)	K66087001	FRONT I/O BPM CABLE	Blood Pressure Monitor (BPM)	N/A
P606	Clamps	K66086001	FRONT I/O CLAMP CABLE	Clamp unit	N/A
P607	24V Input power	K68296001	POWER CABLE TO FRONT I/O	P103 on Power I/O board	N/A
P608	CAN (control and protective)	K68299001	CAN CABLE	P111 on Power I/O and P511 on General I/O	N/A

Contact number	Contact name	Cable	Cable name	Connected to	Components for Self-Care
P609	Control and Protective sensors	K66083001	FRONT I/O DETECTOR CABLE	Sensors according to cable markings (2-3 Bicart, Heparin Pump Overload, Blood pump Cover, Priming Detector, 19-20 Level Detector Receiver, 24-25 Level Detector transmitter)	N/A
P610	Heparin pump and BPTT	K66085001	FRONT I/O HEPARINE CABLE	Heparin pump and BPTT	N/A
P611	Blood pump	K66084001	FRONT I/O BLOOD CABLE	Blood pump according to cable markings (BP Rotation Indicator, BP Tachometer, BP Motor)	N/A
P652	Venous Pressure Transducer (Protective)	N/A	N/A	Venous Pressure Transducer (Protective)	N/A

Table 10-5. Button board K64816005

Contact number	Contact name	Cable	Cable name	Connected to	Components for Self-Care
P1	Alarm Light Bar	K67216001	ALARM AND BACK LIGHT CABLE	P1 on Alarm Light Bar Board	N/A
P2	Touch and back light	K67217001	TOUCH BACK LIGHT CABLE	P203 on Display board	K68679001 and K68682001
P3	Back light	K67216001	ALARM AND BACK LIGHT CABLE	Display	N/A
P4	Touch	N/A	N/A	Display (touch cable included in Display)	N/A
P5	Power I/O	K68298001	POWER I/O FRONTBUTTO N CABLE	P102 on Power I/O board	K68680001 and K68683001

Table 10-6. Alarm Light Bar board K63362005

Contact number	Contact name	Cable	Cable name	Connected to	Components for Self-Care
P1	Alarm Light Bar	K67216001	ALARM AND BACK LIGHT CABLE	P1 on Button Board	N/A

Table 10-7. Relay unit K22469004 including Relay board K24576002

Contact number	Contact name	Cable	Cable name	Connected to	Components for Self-Care
P930	FM I/O	K66095001	POWER I/O HEATER CONTROL CABLE	P110 on Power I/O board (6-pin connector)	N/A
P933	Heater	N/A	N/A	Flow heater	N/A
P934	FM I/O	K66095001	POWER I/O HEATER CONTROL CABLE	P110 on Power I/O board (2-pin connector)	N/A
P935	AC/DC	N/A	N/A	Mains power from power supply unit K62989 (3-pin connector)	N/A

11 Fluid unit - flow path

AK 98® Dialysis machine

Fluid unit - flow path

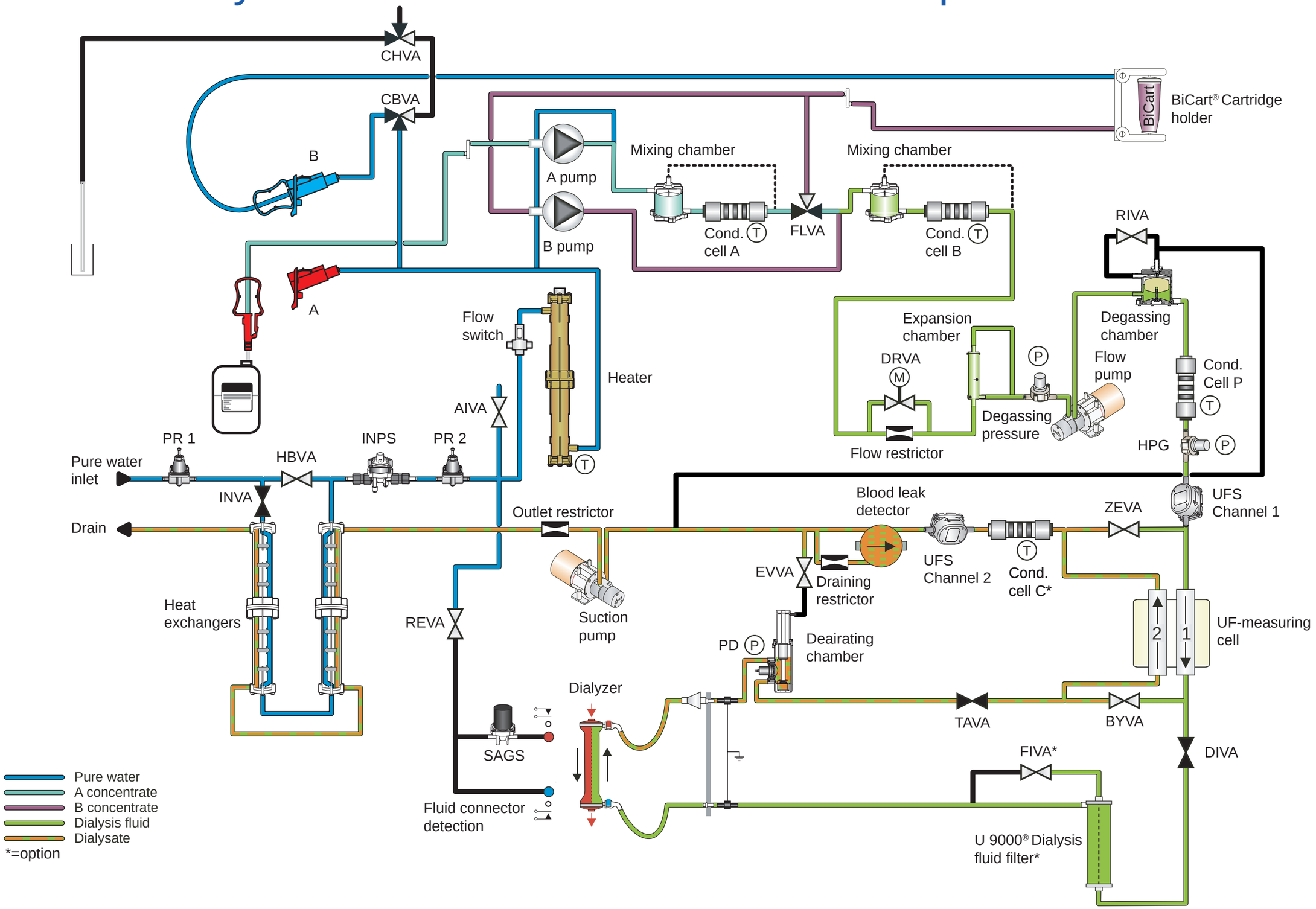

HCEN12630 © 2015 Gambro Lundia AB, Rev. 02.2015

GAMBRO®

12 Functional check

12.1 About functional check

12.1.1 Definition

The functionality of the protective system is checked by the AK 98 dialysis machine before each treatment. A fault detection during the pre-treatment tests will make it impossible to start the treatment.

The pre-treatment tests of the internal safety and calibrations are defined as the functional check.

`Functional check` will appear in the Machine state indicatior field.

12.1.2 The different parts in functional check

The AK 98 dialysis machine functional check begins with a Power On Self Test (**POST**) that includes tests of CPU and RAM. Refer to Section 12.2 “POST - Power On Self Test” on page 231.

Thereafter the complete **functional check** for all subsystems used in supervision of the treatment is performed. The functional check is divided into following three main sections:

- **Common tests**, refer to Section 12.5.1 “Sub-tests” on page 236 for more information.
- **BM tests**, refer to Section 12.6.1 “Sub-tests” on page 243 for more information.
- **FM tests**, refer to Section 12.7.1 “Sub-tests” on page 251 for more information.

12.1.3 The difference between Basic Functional Check and Extended Functional Check

Basic functional check is a preset. Basic functional check and extended functional check has the same structure.

The main difference between them is that the following tests are excluded from the basic functional check:

- Valves current test
- High and low temperature tests
- High and low conductivity test
- Valves leakage test, including correlation test between HPG- and PD- pressure
- Degassing pressure test
- UFS slope self calibration

An extended functional check is performed at the first startup of the machine after midnight, 00:01.

A basic functional check is performed (if preset) at the next startup during the same day, until 23:59. The basic functional check also includes a DIVA/TAVA/EVVA closing test. This test is not included in the extended functional check.

Extended functional check is also performed:

- After exit from service mode (Even if extended functional check has been performed earlier the same day.).
- If an unconditional technical alarm has occurred.

Both the Protective sub-system and the Control sub-system are independently able to force the machine to perform an extended functional check. Basic functional check is only performed if both systems agree on it.

12.1.4 Purpose with this chapter

This chapter contains information about the tests and sub-tests within the functional check for the AK 98 dialysis machine. It begins with a general operating instruction for functional check, i.e. how the operator is supposed to interact with the machine during functional check.

The intention with this chapter is to describe the test objectives, the conditions for the different tests and to supply the service engineers with information about possible error codes triggered if the tests fails.

This chapter does not include a complete description of the Error codes. Therefore the Error Codes and Service Logging List for the AK 98 dialysis machine is needed as a complementary information when troubleshooting the machine.

12.1.5 Operation during functional check

During the functional check of the **BM**, the blood pump cover shall be closed and the pressure transducers of the blood lines shall not be connected.

When the Operator message, `When ready for Priming, start blood pump` appears, the **Blood pump** button starts to flash, the blood lines can be connected to the machine (if not done before switching the machine on). Refer to the AK 98 operator's manual for detailed information.

It is also possible to start the priming procedure of the blood part.

To be able to finish the functional check, the proper concentrates shall be connected.

! **NOTE!**
If BiCart cartridge is used, it can be attached after finalized functional check. An attention appears requesting the operator to attach the cartridge. The loudspeaker can be permanently muted. The BiCart cartridge shall be attached to obtain green bypass path of the Flow Diagram.

The dialysis fluid tubes shall remain connected to the safety couplings of the machine until `Function check` disappears from the Machine state indicator field.

! **NOTE!**
If the ultrafilter (option) is installed, the dialysis fluid tubes shall remain connected to the safety couplings until the bypass path of the Flow Diagram lights up green.

When `Function check` disappears from the Machine state indicator field the dialysis fluid tubes can be attached to the dialyzer.

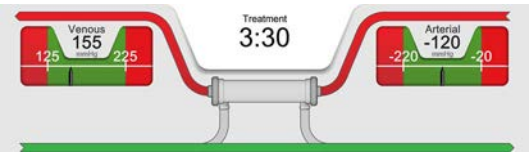

The bypass path of the Flow Diagram lights up. Before the correct conductivity level has been reached the bypass path will be orange. When the fluid preparation is finished the bypass path turns green.

At the same time the `Fluid bypass` button will be flashing. When pressed (and green path), the button lights up and the dialysis fluid will start to flow through the dialyzer fluid tubes.

If the dialysis fluid tubes are connected to the safety couplings, the fluid will circulate within the machine. If they are connected to the dialyzer, the fluid will enter the dialyzer at that time. Refer to the AK 98 operator's manual for instructions on how to properly attach the dialysis fluid tubes to the dialyzer.

NOTE!
If desired, the concentrates may be connected, and the blood lines may be attached, before the machine has been switched on. If so, do not connect the pressure transducers of the blood lines to the machine until the machine has been switched on and the **Blood pump** button starts to flash.

NOTE!
After the machine has passed the functional check and the bypass path on the Flow Diagram lights up green, it is possible to activate concentrate stand-by mode in order to save concentrates before patient connection. Refer to the AK 98 operator's manual for instructions on how to activate concentrate stand-by mode.

12.2 POST - Power On Self Test

The AK 98 dialysis machine functional check begins with a Power On Self Test (**POST**) that includes tests of the CPU and RAM.

The AK 98 dialysis machine has ten processors.

Each processor has four LEDs that indicate the machine startup status.

During the POST phases, the LEDs indicate what is being tested.

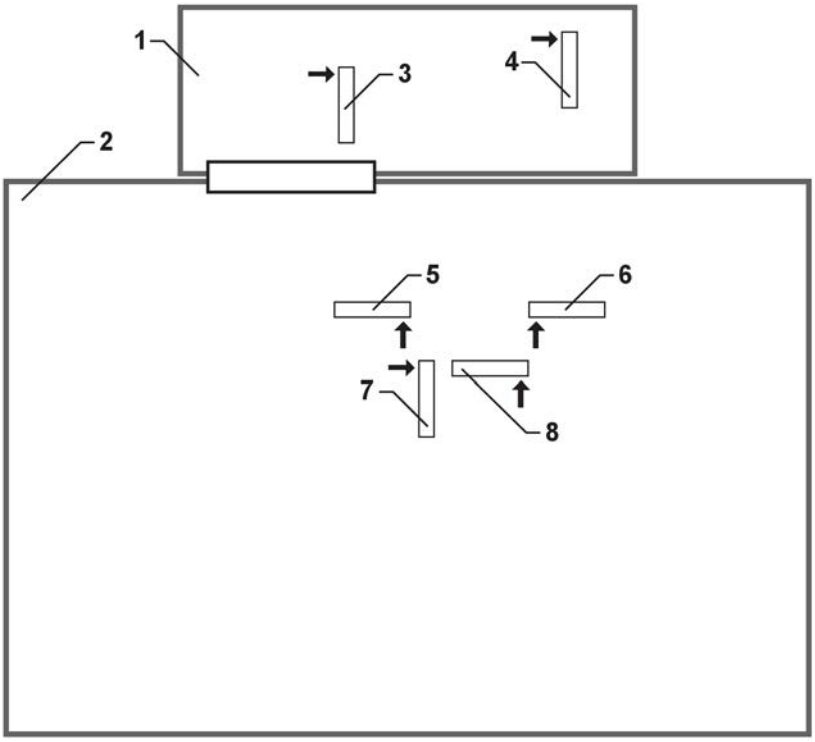

Figure 12-1. LED groups located on the Display pcb and the Power I/O. The arrows shows on which side LED1 is located.

1. Display pcb
2. Power I/O
3. I/O Protective Display
4. User Interface
5. I/O Control Power
6. I/O Protective Power
7. Control
8. Protective

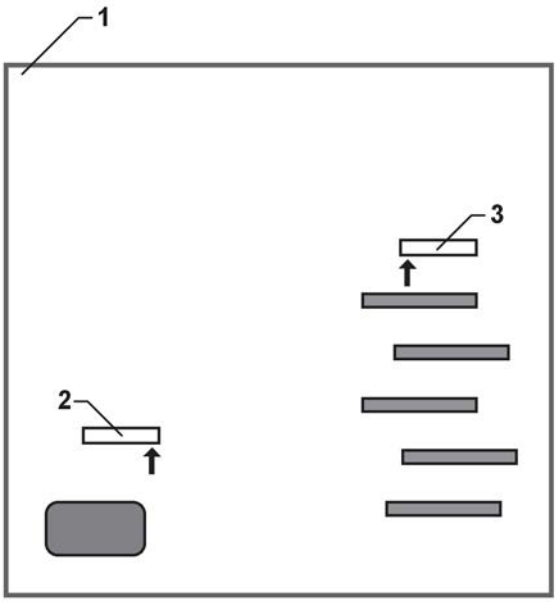

Figure 12-2. LED groups located on the General I/O. The arrows shows on which side LED1 is located.

1. General I/O
2. Protective General
3. I/O Control General

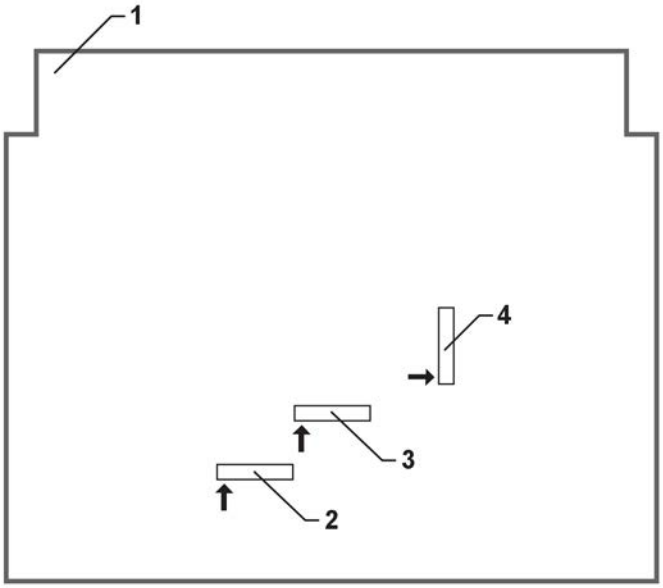

Figure 12-3. LED groups located on the Front I/O. The arrows shows on which side LED1 is located.

1. Front I/O
2. I/O Protective Front
3. I/O Control Front
4. Blood Pump Controller

The following terms apply to all the LEDs (except for the LEDs on the user interface) during the POST phases:

The four LEDs display numbers in binary form.

LED lights up = 1

LED is not lit = 0

Table 12-1. Test groups and LED pattern.

Decimal	**Binary, LED pattern (LED4 first and LED1 last)**	**Test group**
0	0000	Initialize ports and clock
2	0010	Register tests
3	0011	Register tests
4	0100	Register tests
5	0101	Register tests
6	0110	Register tests
7	0111	Register tests
8	1000	Register tests
9	1001	Register tests
10	1010	Register tests
11	1011	RAM test

Decimal	Binary, LED pattern (LED4 first and LED1 last)	Test group
12	1100	RAM test
13	1101	RAM test
1	0001	Program checksum test (verification of code memory.)
Flashing LEDs	-	Program is running

The 11th group belongs to the blood pump controler, which does not indicate test status with LEDs.

Table 12-2. During machine startup the following terms apply for the user interface:

LEDs	Test
LED1	Partial memory test (block 1-31 of 32). 1 block = 16 MB.
LED2	Partial memory test (last block, block 32 of 32). A full memory test is running, if none of LED1 or LED2 is lit.
LED3	Flashes when the memory test is in progress.
LED4	Errors found in memory test. Boot sequence is stopped.

12.3 Test philosophy

After the termination of the POST, the protective system performs a functional check of all subsystems used in supervision of the treatment, in other words, everything which has to do with safety is tested.

During the functional check the control system acts in a slave mode, directed by the protective system.

Protective system sends a test request on which the control system acts. When the control system has performed its task an acknowledge signal is sent back to the protective system. Thereafter the protective system, with use of its own transducers, verifies the result of the test.

If the test is not approved, protective system will do two things:

- send a signal to control system, indicating that the test failed
- restart the test sequence

When a signal is received in control system, indicating a test failure, the control system will increment a dedicated error counter. If the counter exceeds a predefined limit, an error code will be generated.

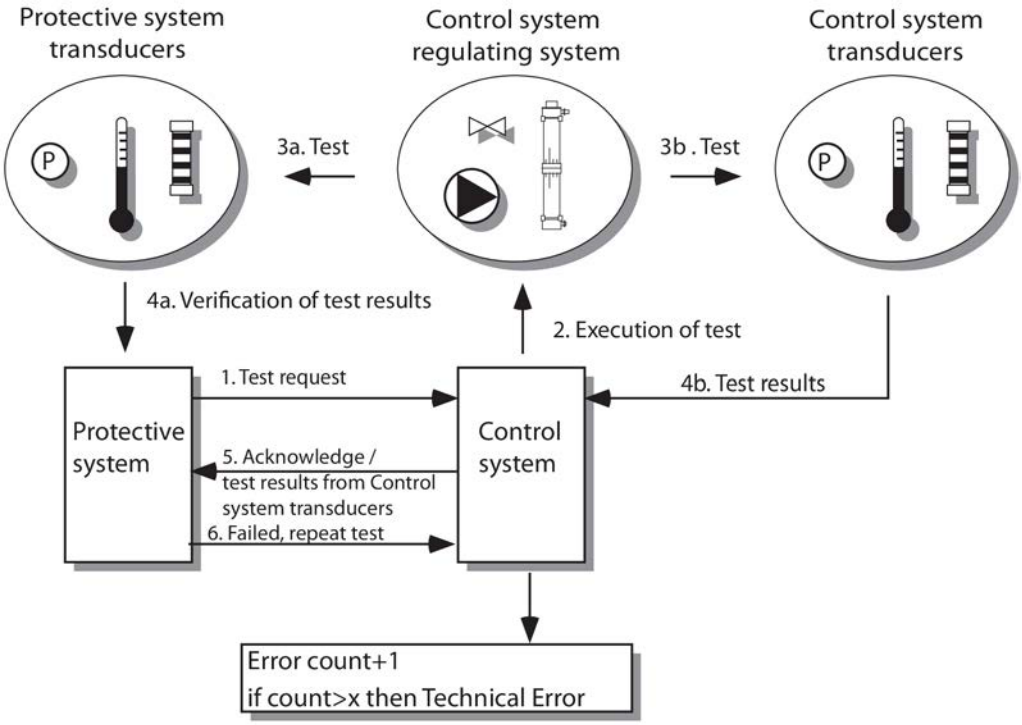

Figure 12-4. Functional check - Test philosophy

1. Test request;
2. Execution of test;
3. a/b Test;
4. 4.a Verification of test results;4.b Test results;
5. Acknowledge / test results from Control system transducers;
6. Failed, repeat test

12.4 Functional check overview

The functional check of the safety system is divided into following three main sections:

- Common tests
- BM tests
- FM tests

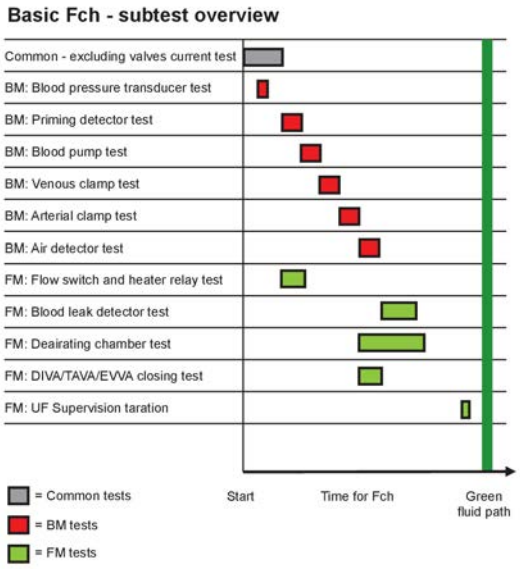

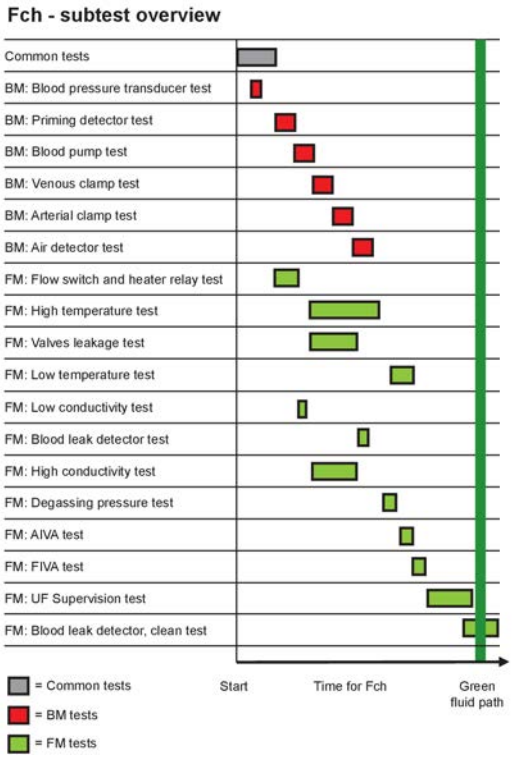

12.5 Common tests

12.5.1 Sub-tests

The common test includes following sub-tests:

- Light indicator test, refer to Section 12.5.2 “Common tests / Light indicator test” on page 237

- Safety relay test, refer to Section 12.5.3 “Common tests / Safety relay test” on page 237
- Valves current test, refer to Section 12.5.4 “Common tests / Valves current test” on page 238
- Speakers test, refer to Section 12.5.5 “Common tests / Speakers test” on page 242
- Battery test, refer to Section 12.5.6 “Common tests / Battery test” on page 243

12.5.2 Common tests / Light indicator test

During the Safety Relay test and the Speakers test the yellow and red light indicators are lit, in sequence for 5 seconds. No current measurement takes place, making it the operators responsibility to check that all LED’s are lit.

12.5.3 Common tests / Safety relay test

12.5.3.1 Test objective

To verify that the Safety Relay is able to cut off and switch on +24 V.

12.5.3.2 Test description

The safety relay is located on the Power I/O board (Protective system).

The Safety relay test is done by monitoring a valve current:

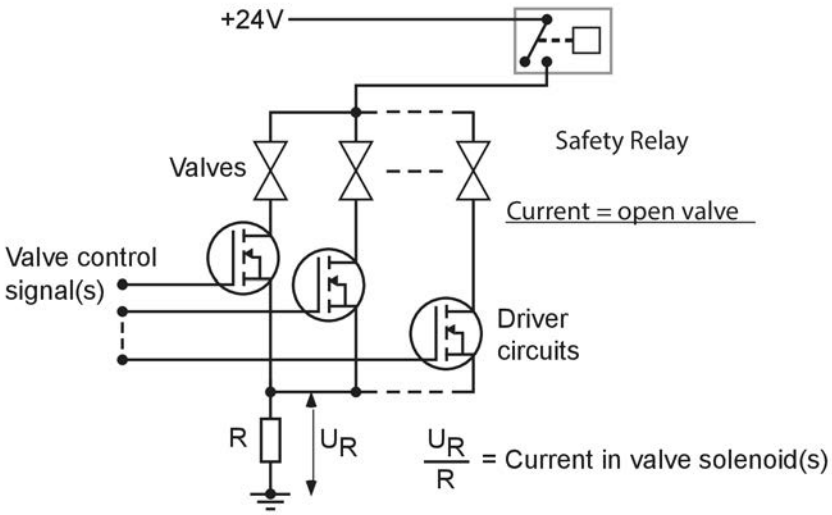

The test starts with deactivating all the valves, by disconnecting the safety relay. The so-called reference current, a measurement offset error, is determined. It should be very close to zero.

In the following tests, the reference current is used to compensate the current measurement.

12.5.3.3 Safety Relay test description

Conditions	Evaluations & Actions	Error codes
Safety relay Off, BYVA Off	If the reference current is too high (>100 mA), then repeat test until error code is generated.	0510 088 050
Safety relay On, BYVA On	If (meas current)–(reference current) is too low (<100 mA), then repeat test until error code is generated.	0510 088 052
Safety relay Off, BYVA On	If (meas current)–(reference current) is too high (>50 mA), then repeat test until error code is generated.	0510 088 051
Safety relay On, BYVA On	If (meas current)–(reference current) is too low(<100 mA), then repeat test until error code is generated.	0510 088 053
Safety relay On, BYVA Off	If (meas current)–(reference current) is too high (>50 mA), then repeat test until error code is generated.	0510 088 054

12.5.4 Common tests / Valves current test

12.5.4.1 Test objective

To verify that the protective system and control system can control important valves in the fluid part. (i.e. set the fluid in bypass in case of an alarm.)

The test is carried out and the results are measured differently depending on how the valve is controlled, either by one or two systems. The current is measured when the valves are closed. The current measured shall be <100 mA.

For the valve to be considered open the current shall be the current measured when the valve was closed with at least 100 mA added. (Open current > closed valve current + 100 mA).

All tests are carried out with the safety relay leading current.

During the BYVA test the currents measured by the Protective system and the Control system are added and the added values are used when the test is evaluated.

! **NOTE!**
Common tests / Valves current test is not part of the Basic functional check.

12.5.4.2 Common tests / Valve current test - communication test

Conditions	Evaluations & Actions	Error codes
The protective system closes BYVA and DIVA.	The protective system requests the control system to close BYVA and DIVA. The control system does not acknowledge, then repeat test until error code is generated.	0511 088 097

12.5.4.3 Common tests / Valve current test - close failure test

Conditions	Evaluations & Actions	Error codes
The protective system and the control system closes DIVA, BYVA, TAVA and EVVA	If current is too high, then repeat test until error code is generated.	0511 088 098

12.5.4.4 Common tests / Valve current test - DIVA

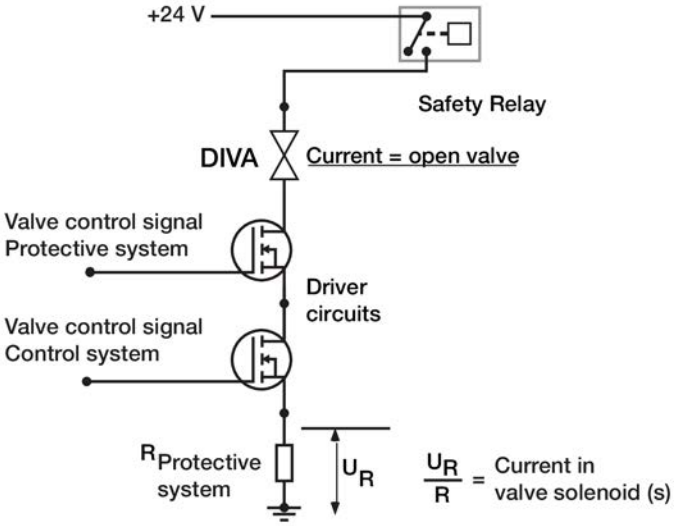

Conditions	Evaluations & Actions	Error codes
The protective system and the control system opens DIVA.	If current is too low, then repeat test until error code is generated.	0511 088 099
The protective system closes and the control system opens DIVA.	If current is too high, then repeat test until error code is generated.	0511 088 100
The protective system opens and the control system closes DIVA.	If current is too high, then repeat test until error code is generated.	0511 088 101

12.5.4.5 Common tests / Valve current test - CHVA

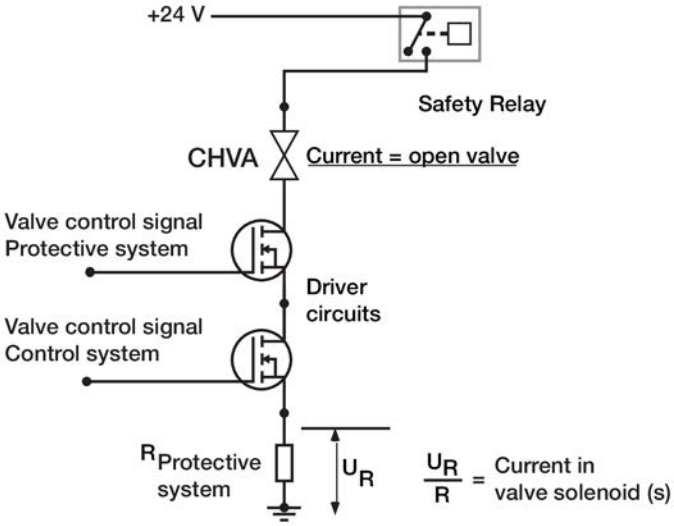

Conditions	Evaluations & Actions	Error codes
The protective system and the control system closes CHVA.	If current is too high, then repeat test until error code is generated.	0503 037 001
The protective system closes and the control system opens CHVA.	If current is too high, then repeat test until error code is generated.	0503 037 002
The protective system closes and the control system opens CHVA.	If current is too high, then repeat test until error code is generated.	0503 037 003
The protective system and the control system opens CHVA.	If current is too low, then repeat test until error code is generated.	0503 037 004
The protective system opens and the control system closes CHVA.	If current is too high, then repeat test until error code is generated.	0503 037 005

The valve current test CHVA is only done after Heat Disinfection Program with Citric Acid (CleanCart-C, Liquid Citric Acid and Short Heat Citric).

12.5.4.6 Common tests / Valve current test - BYVA

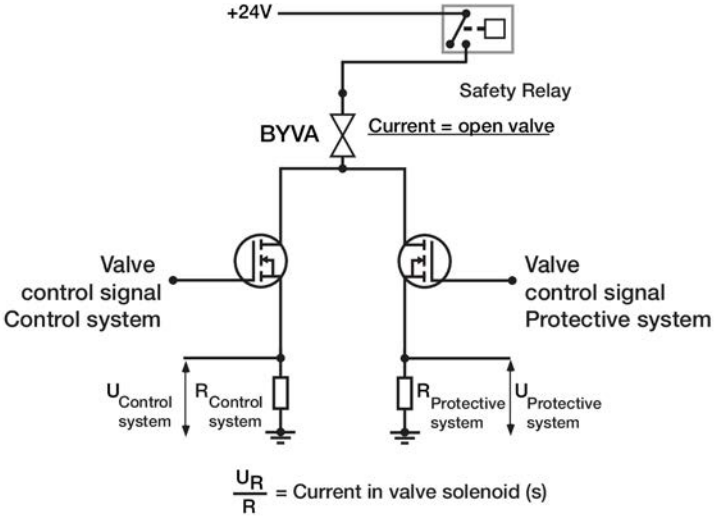

Conditions	Evaluations & Actions	Error codes
The protective system and the control system opens BYVA.	If current is too low, then repeat test until error code is generated.	0511 088 102
The protective system closes and the control system opens BYVA	If current is too low, then repeat test until error code is generated.	0511 088 103
The protective system opens and the control system closes BYVA.	If current is too low, then repeat test until error code is generated.	0511 088 104

12.5.4.7 Common tests / Valve current test - EVVA / TAVA

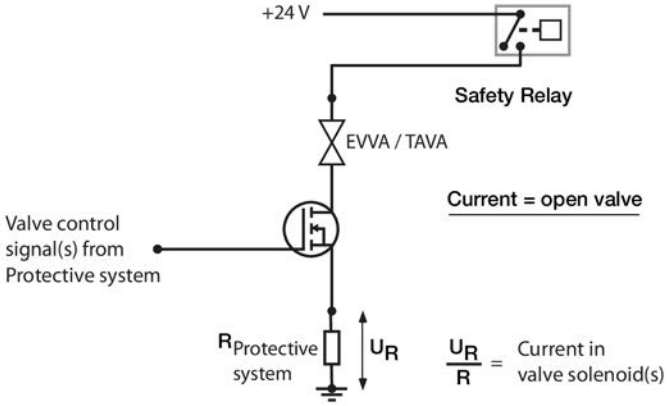

Conditions	Evaluations & Actions	Error codes
The protective system opens TAVA	If current is too low, then repeat test until error code is generated.	0511 088 105
The protective system opens EVVA	If current is too low, then repeat test until error code is generated.	0511 088 106

12.5.4.8 Common tests / Valve current test - FLVA / DRVA / AIVA / FIVA / CBVA / HBVA

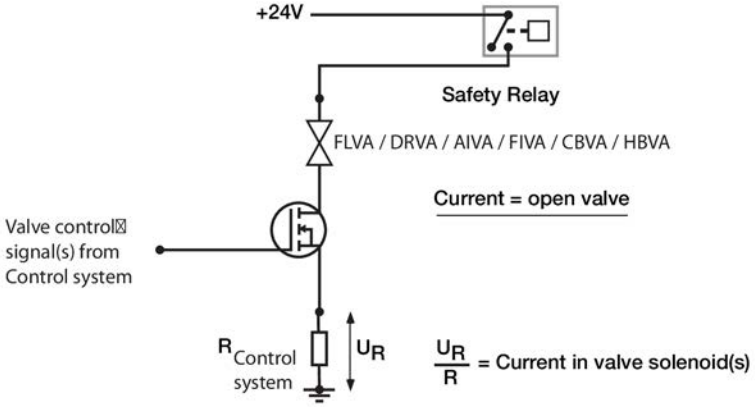

Conditions	Evaluations & Actions	Error codes
Ref current is measured when FLVA is closed. FLVA is opened. New current is measured.	If new current - ref. current <200 mA.	0505 018 011
The Control System closes and the Control System opens DRVA. Ref current is measured when DRVA is closed. DRVA is opened. New current is measured.	The current through DRVA is measured and compared when its closed and opened. If the current difference is >200 mA.	0507 018 009
	Variable flow installed: If new current - ref. current >200 mA.	0507 018 009
	Variable flow not installed. If new current - ref current <200 mA.	0507 018 001
Ref current is measured when AIVA is closed. AIVA is opened. New current is measured.	If new current - ref current <200 mA.	0505 018 002
Ref current is measured when FIVA is closed. FIVA is opened. New current is measured.	UFD.inst: If new current - ref. current <200 mA.	0505 018 008
	UFD.not.inst: If new current - ref. current >200 mA.	0505 018 007
Ref current is measured when HBVA is closed. HBVA is opened. New current is measured.	HBVA inst: new current -refCurrent <200 mA.	0505 018 013
[a]Ref current is measured when CBVA is closed. CBVA is opened. New current is measured.	If new current - ref. current <200 mA.	0507 018 010

[a] Only done before Chemical Disinfection or Heat Disinfection Program with Liquid Citric Acid.

12.5.5 Common tests / Speakers test

The first loudspeaker is connected to the user interface. The second loudspeaker and the microphone is connected to the protective system.

Table 12-3. Speakers test

Conditions		Evaluations & Actions	Error codes
Speaker Protective system	Speaker User interfase	N/A	N/A
Off	Off	If any of the speakers sound, then repeat the test until error code is generated.	0510 088 020
On	Off	If the first speaker is quiet, then repeat the test until error code is generated.	0510 088 018

Conditions		Evaluations & Actions	Error codes
Off	Off	If any of the speakers sound, then repeat the test until error code is generated.	0510 088 019
Off	On	If the second speaker is quiet, then repeat the test until error code is generated.	0510 088 022
Off	Off	If any of the speakers sound, then repeat the test until error code is generated.	0510 088 021

12.5.6 Common tests / Battery test

Conditions	Evaluations & Actions	Error codes
Load and charger is disconnected	Voltage U1 is measured.	N/A
Load is connected	Voltage U2 is measured. Check that the load is connected. If U1-U2 <= 0,1V	Attention
N/A	Check that voltage with load is sufficient. If U2 < 22,8V	Attention

NOTE!
If the battery that supplies the machine with power during mains power failure is not properly charged, an attention will be generated.

```
503 Battery failure
Blood pump will not be able to run in case of power failure. To
continue, change battery or press Confirm.
```

The attention is only displayed when blood is not detected.

It is needed to confirm the attention in order to get a green fluid path.

If the battery is not properly charged and a mains power failure occurs, the machine could switch off without any loudspeaker alarming and with no automatic start when the mains power returns.

12.6 Blood monitor – functional check

12.6.1 Sub-tests

The BM sub-tests that are described in this section are:

- Blood pressure transducer test, refer to Section 12.6.2 “Blood pressure transducer test” on page 244
- Priming detector test, refer to Section 12.6.3 “Priming detector test” on page 246
- Blood pump test, refer to Section 12.6.4 “Blood pump test” on page 247
- Venous clamp test, refer to Section 12.6.5 “Venous clamp test” on page 249
- Arterial clamp test, refer to Section 12.6.6 “Arterial clamp test” on page 249
- Air detector test, refer to Section 12.6.7 “Air detector test” on page 250

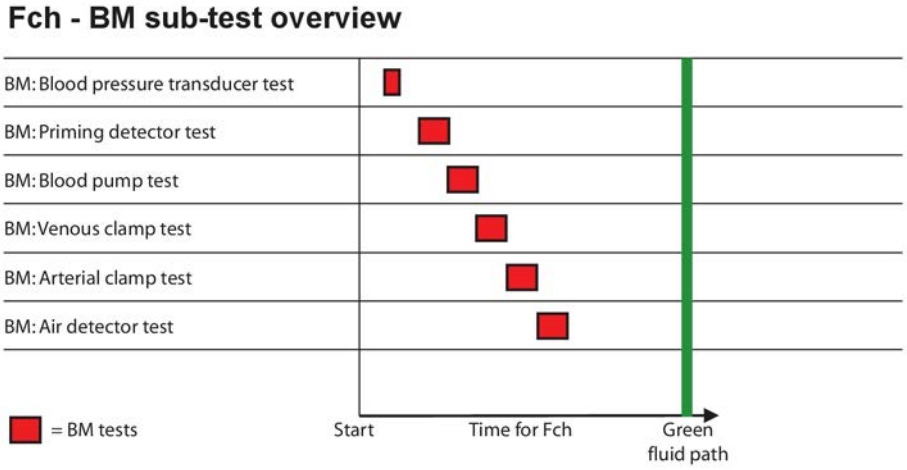

12.6.2 Blood pressure transducer test

12.6.2.1 Pressure measurement

It is important to protect against blood loss. One way to reduce the risk of blood loss is to supervise the venous pressure. It is important to know that a good blood access is achieved to/from the patient and for that reason the arterial pressure measurement is done. Arterial pressure monitoring reflects the pressure exerted to pull blood from the patient's vascular access to the blood pump. Due to this "pulling" effect or suction, the arterial pressure reading is a negative number. The arterial pressure reading describes the amount of suction needed to achieve the blood pump speed set on the AK 98 dialysis machine and best describes the blood flow from the patient's vascular access into the extracorporeal circuit.

The blood pressure transducer test runs as a part of the functional check. The components used for the test are not set during treatment, therefore the supply voltage is cut off after the test is completed. This test is done in five steps, a zero pressure test, a negative pressure test, a positive pressure test, a repeated zero pressure test, and a relay test.

12.6.2.2 Zero pressure test

In the zero pressure test the pressure measured by any of the blood pressure transducer shall not exceed +/- 10 mmHg at atmospheric pressure.

Table 12-4. Zero pressure tests

Conditions	Evaluations & Actions	Error codes
Release valve open	Measure venous pressure protective system, if pressure > 10 mmHg or pressure < -10 mmHg then repeat test.	Attention
Release valve open	Compare venous pressure protective system with venous pressure control system. If the difference is >10 mmHg then repeat test.	Attention
Release valve open	Measure arterial pressure, if pressure > 10 mmHg or pressure < -10 mmHg then repeat test.	Attention

NOTE!
If the tests fails, the test is repeated. An attention is issued for each pressure transducer that failed the test:

```
548 Functional check is stopped
To continue, disconnect venous pressure transducer connector.
```

```
549 Functional check is stopped
To continue, disconnect arterial pressure transducer connector.
```

12.6.2.3 Negative pressure test

The measured pressure at each of the three pressure transducers shall reach below -200 mmHg. The measured pressure at each of the three pressure transducers shall not differ from each other more than 20 mmHg. If the Negative Pressure test fails a technical error is generated.

Table 12-5.

Conditions	Evaluations & Actions	Error codes
Release valve open	Any pressure transducer shows > –200 mmHg Measured pressure differ more than 20 mmHg between any pair of transducers	0117 047 000

12.6.2.4 Positive pressure test

The measured pressure at each of the three pressure transducers shall reach over +200 mmHg. The measured pressure at each of the three pressure transducers shall not differ from each other more than 20 mmHg. If the Positive Pressure test fails a technical error is generated.

Table 12-6.

Conditions	Evaluations & Actions	Error codes
Release valve closed	Any pressure transducer shows < +200 mmHg Measured pressure differ more than 20 mmHg between any pair of transducers	0117 047 001

12.6.2.5 Relay test

The relay controlling the pump and the valve is disabled. The pump is started to generate a negative pressure. The pump shall not work and the valve shall not close. The pressure shall not decrease.

Table 12-7.

Conditions	Evaluations & Actions	Error codes
Release valve open, pump relay disabled	if pressure difference between test start and test end > 100 mmHg (for any transducer)	0117 047 002

12.6.3 Priming detector test

The receiving side of the priming detector is a two-channel device, with one channel going to control system and the other to protective system:

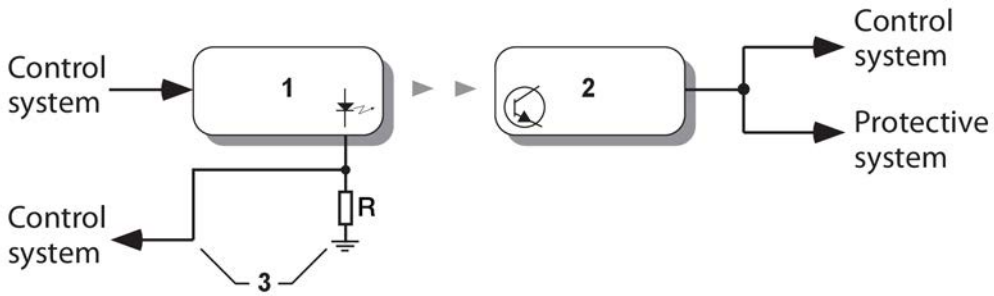

Figure 12-5. Priming detector

1. Transmitter
2. Receiver
3. Current measurement

This test is initiated with a check that the priming detector is empty:

Table 12-8. Test for checking that priming detector is empty

Conditions	Evaluations & Actions	Error codes
Priming Detector Receiver, Protective system	Priming empty? If not, i.e. darkness, an alarm is generated.	Alarm
Priming Detector Receiver, Control system	Priming empty? If not, i.e. darkness, an alarm is generated.	Alarm

```
102 Blood is detected during functional check
Blood in priming detector.
Functional check is stopped.
```

When the blockage disappears, then the functional check will continue, i.e. the functional check will be halted until no blood is detected.

Before the priming detector is started the transmitter current is set to its calibrated value.

Then follows the actual priming detector test:

Table 12-9. Priming detector test

Conditions	Evaluations & Actions	Error codes
The control system sends calibrated transmitter current to the protective system.	If not received, then repeat test until error code is generated.	0510 088 042
The protective system checks if light or darkness is detected.	If the protective channel senses darkness, then repeat test until error code is generated.	0510 088 044
The protective system checks if light or darkness is detected.	If the control channel senses darkness, then repeat test until error code is generated.	0510 088 045
Measure actual transmit current	If it is too far away from the calibrated transmitter current then repeat test until error code is generated.	0511 088 043
Set transmit current to zero	If the protective channel senses light, then repeat test until error code is generated.	0511 088 046
Set transmit current to zero	If the control channel senses light, then repeat test until error code is generated.	0511 088 047
Increase to calibration current	If the protective channel senses darkness, then repeat test until error code is generated.	0511 088 048
Increase to calibration current	If the control channel senses darkness, then repeat test until error code is generated.	0511 088 049

12.6.4 Blood pump test

The blood pump is a DC motor. The blood pump speed is controlled by the voltage supplied to the motor. The voltage is generated from a converter.

The blood pump motor has hall elements for the detection of the rotor position.

The control system controls the blood flow and the start and stop of the blood pump. The protective system can stop the blood pump in order to enter a patient safe state. To facilitate the possibility to stop the blood pump from both systems, two shut off paths are provided. One from the protective system (via I/O protective front) that disables the converter which generates the voltage to the motor and one path from the control system (via I/O control front) that disables the communication control. This solution gives two completely independent shut off paths for the blood pump.

Two signals are associated with the blood pump: the Blood Pump Edge signal (rotation guard, Hall effect transducer), and the Blood Pump Tacho signal (encoder):

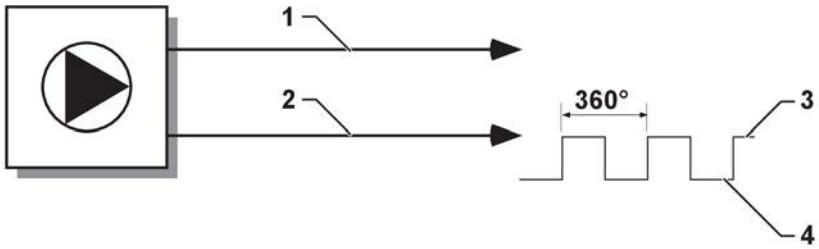

Figure 12-6. Blood pump signals.

1. Blood Pump Tacho signal (speed)
2. Blood Pump Edge signal (pump turning)
3. True
4. False

Table 12-10. Blood pump tests

Conditions	Evaluations & Actions	Error codes
Pump enabled by the protective system and the control system.	The blood pump was commanded to run. The blood pump tacho value is too low AND the rotation indicator is not detecting movement (first check). Repeat test until error code is generated.	0510 088 008
Pump enabled by the protective system and the control system.	The blood pump was commanded to run. The blood pump tacho value is OK but the rotation indicator has not detected any movement (first check). Repeat test until error code is generated.	0510 088 011
Pump enabled by the protective system and the control system.	The blood pump was commanded to run. The blood pump rotation indicator has detected movement but tacho value is too low (first check). Repeat test until error code is generated.	0510 088 013
Pump disabled by the protective system.	The blood pump was commanded to stop by protective system. The measured values from tacho and/or rotation indicator show that the blood pump is still running. Repeat test until error code is generated.	0510 088 010
Pump enabled by the protective system.	The blood pump was commanded to run. The blood pump tacho value is too low AND the rotation indicator is not detecting movement (second check). Repeat test until error code is generated.	0510 088 009

Conditions	Evaluations & Actions	Error codes
Pump enabled by the protective system.	The blood pump was commanded to run. The blood pump tacho value is OK but the rotation indicator has not detected any movement (first check). Repeat test until error code is generated.	0510 088 012
Pump enabled by the protective system.	The blood pump was commanded to run. The blood pump rotation indicator has detected movement but tacho value is to low (second check). Repeat test until error code is generated.	0510 088 014
Pump disabled by the control system.	The blood pump was commanded to stop by the control system. The measured values from tacho and/or rotation indicator show that the blood pump is still running. Repeat test until error code is generated.	0510 088 015

12.6.5 Venous clamp test

The purposes of the **Venous clamp test** are:

- to verify that the venous clamp can be opened by simultaneous order from both the protective system and the control system (at start of the clamp test).
- to verify that the protective system can close and then open the venous clamp.
- to verify that the control system can close and then open the venous clamp.

The venous clamp has two independent shut-off paths. The protective system and the control system must agree to open the venous clamp. If any of them orders the clamp to be closed, it will be closed.

Table 12-11. Venous clamp test

Conditions	Evaluations & Actions	Error codes
Clamp opened by the protective system and the control system.	If the clamp is not opened, then repeat test until error code is generated.	0510 088 069
Clamp closed by the protective system.	If the clamp is not closed, then repeat test until error code is generated.	0510 088 072
Clamp opened by the protective system.	If the clamp is not opened, then repeat test until error code is generated.	0510 088 070
Clamp closed by the control system.	If the clamp is not closed, then repeat test until error code is generated.	0510 088 073
Clamp opened by the control system.	If the clamp is not opened, then repeat test until error code is generated.	0510 088 071

12.6.6 Arterial clamp test

The purpose of the **Arterial Clamp test** is to verify that the protective system and the control system can open and then close the arterial clamp.

The arterial clamp has two shut-off paths. Both the protective system and the control system must agree to open the arterial clamp.

Table 12-12. Arterial Clamp tests

Conditions	Arterial Clamp test	Error codes
Clamp opened by the protective system and the control system.	If the clamp is not opened, then repeat test until error code is generated.	0510 088 132
Clamp closed by the protective system.	If the clamp is not closed, then repeat test until error code is generated.	0510 088 135
Clamp opened by the protective system.	If the clamp is not opened, then repeat test until error code is generated	0510 088 133
Clamp closed by the control system.	If the clamp is not closed, then repeat test until error code is generated.	0510 088 236
Clamp opened by the control system.	If the clamp is not opened, then repeat test until error code is generated.	0510 088 134

12.6.7 Air detector test

This test lies in the second part of the Blood Part Test, since the test requires a filled venous drip chamber. That means that priming shall be engaged, i.e. the blood pump shall be able to run.

The Air Detector receiver is a two-channel device:

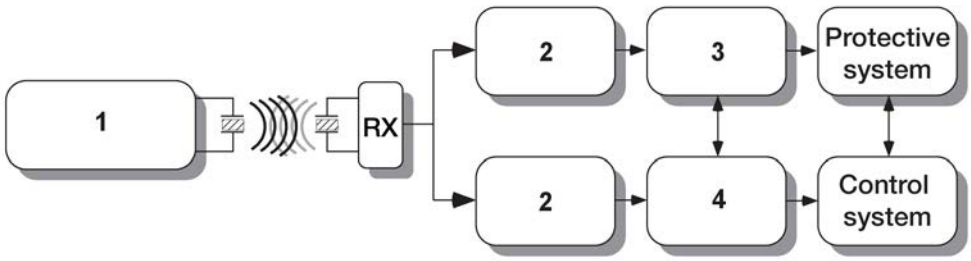

Figure 12-7. Air detector.

1. Transmitter logic
2. Receiver amplifier
3. I/O Protective Front
4. I/O Control Front

Start condition for the test is no alarm, i.e. a filled venous drip chamber. The test starts when this is fulfilled.

Table 12-13. Air detector tests

Conditions	Evaluations & Actions	Error codes
Transmitter intensity decreased	Sensing air in the protective channel? If not, then repeat test until error code is generated.	0510 088 001
Transmitter intensity decreased	Sensing air in the control channel? If not, then repeat test until error code is generated.	0510 088 002
Transmitter intensity increased	The protective channel alarm-free? If not, then repeat test until error code is generated.	0510 088 003
Transmitter intensity increased	The control channel alarm-free? If not, then repeat test until error code is generated.	0510 088 003

12.7 Fluid monitor – functional check

12.7.1 Sub-tests

The FM sub-tests that are described in this section are:

- Flow switch and heater relay test, refer to Section 12.7.2 “Flow switch and heater relay test” on page 252.
- Valves leakage test, refer to Section 12.7.3 “Valves leakage test” on page 254.
- High temperature test, refer to Section 12.7.4.2 “High temperature test” on page 263.
- Low temperature test, refer to Section 12.7.4.3 “Low temperature test” on page 264.
- Low conductivity test, refer to Section 12.7.6.2 “Low conductivity test” on page 265.
- Blood leak detector test, refer to Section 12.7.5 “Blood leak detector test” on page 264.
- High conductivity test, refer to Section 12.7.6.3 “High conductivity test” on page 266.
- Degassing pressure test, refer to Section 12.7.7 “Degassing pressure test” on page 267.
- AIVA test, refer to Section 12.7.8 “AIVA test” on page 269.
- DIVA/TAVA/EVVA closing test, refer to Section 12.7.9 “DIVA/TAVA/EVVA closing test” on page 270
- UF Supervision test, refer to Section 12.7.10 “UF Supervision test” on page 271
- Blood leak clean test, refer to Section 12.7.11 “Blood leak clean test” on page 273.

! **NOTE!**
Sub-tests are not part of the basic functional check.

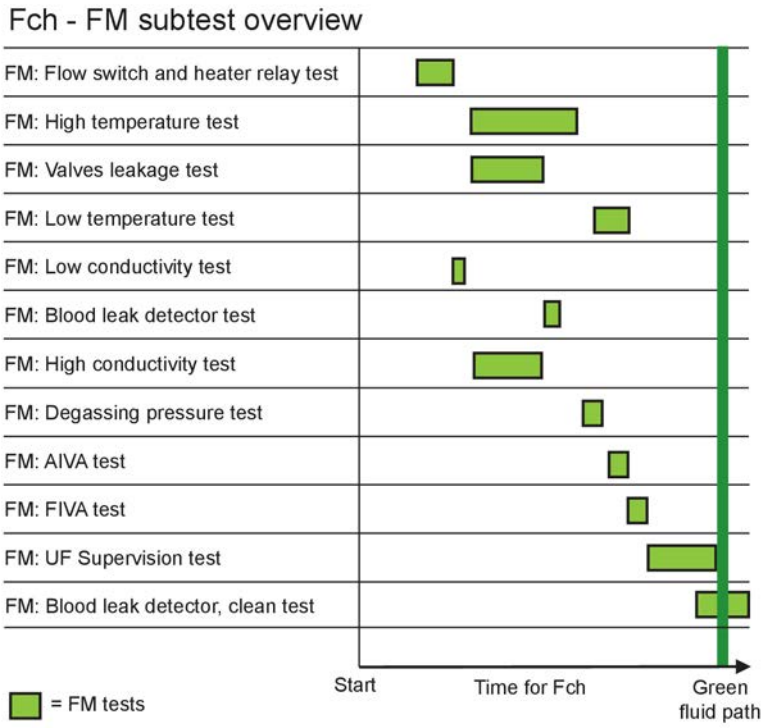

12.7.2 Flow switch and heater relay test

The purpose of the flow switch is to cut off the power to the heating element if/when the flow disappears. The switch is handled by the Protective system which can switch off the heater supply both with the heater relay and the opto relay:

The main objective of the test is to verify the function of the switch and the so-called “hardware shut-off path”.

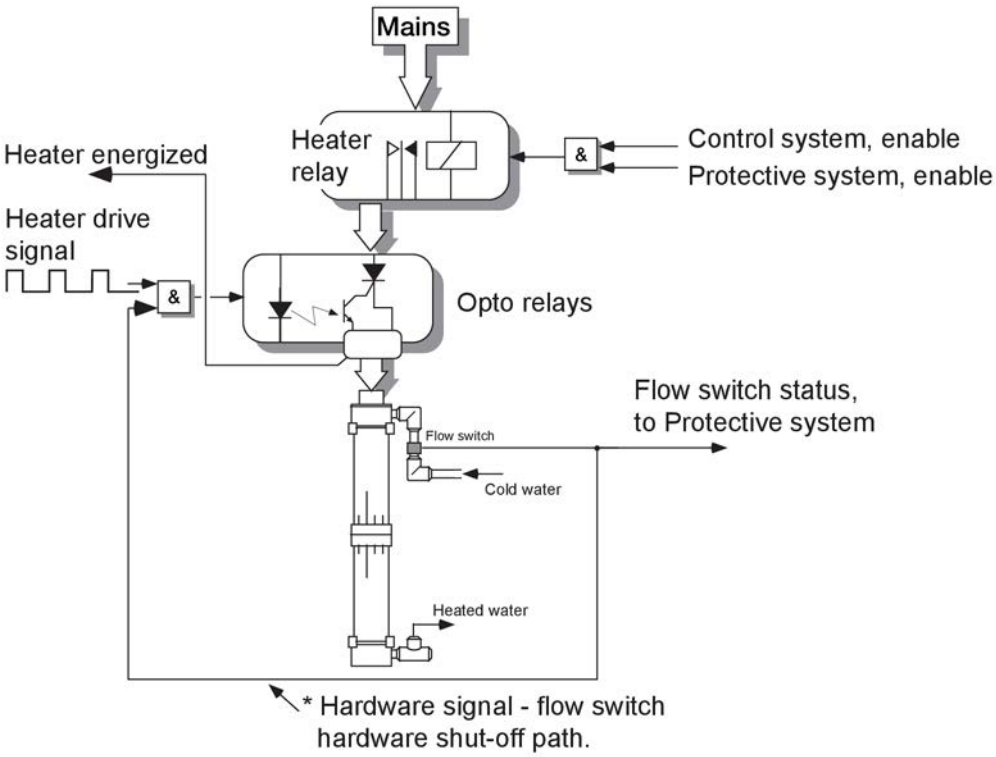

Table 12-14. Flow Switch test

INVA open	Duty cycle	Control System heater relay	Protective System heater relay	Flow-switch	Error code
Yes	0%	Enable	Enable	Flow?	No => 0511 088 031
No	0%	Enable	Enable	Flow?	Yes => 0511 088 030

Table 12-15. Heater relay test

INVA open	Duty cycle	Control System heater relay	Protective System heater relay	Heater energized	Error code
Yes	40%	Enable	Enable	Energized?	No => 0511 088 079
Yes	0%	Enable	Enable	Energized?	Yes => 0511 088 075
Yes	40%	Enable	Enable	Energized?	No => 0511 088 080
Yes	40%	Enable	Disable	Energized?	Yes => 0511 088 076
Yes	40%	Enable	Enable	Energized?	No => 0511 088 081
Yes	40%	Disable	Enable	Energized?	Yes => 0511 088 077
Yes	40%	Enable	Enable	Energized?	No => 0511 088 082
No	40%	Enable*	Enable*	Energized?	Yes => 0511 088 078
Yes	40%	Enable	Enable	Energized?	No => 0511 088 083

*The Control system and the Protective system ability to disable the heater is bypassed for 7 seconds. This is for testing the hardware shut-off path between the Flow-switch and the Opto relay.

12.7.3 Valves leakage test

12.7.3.1 Overview

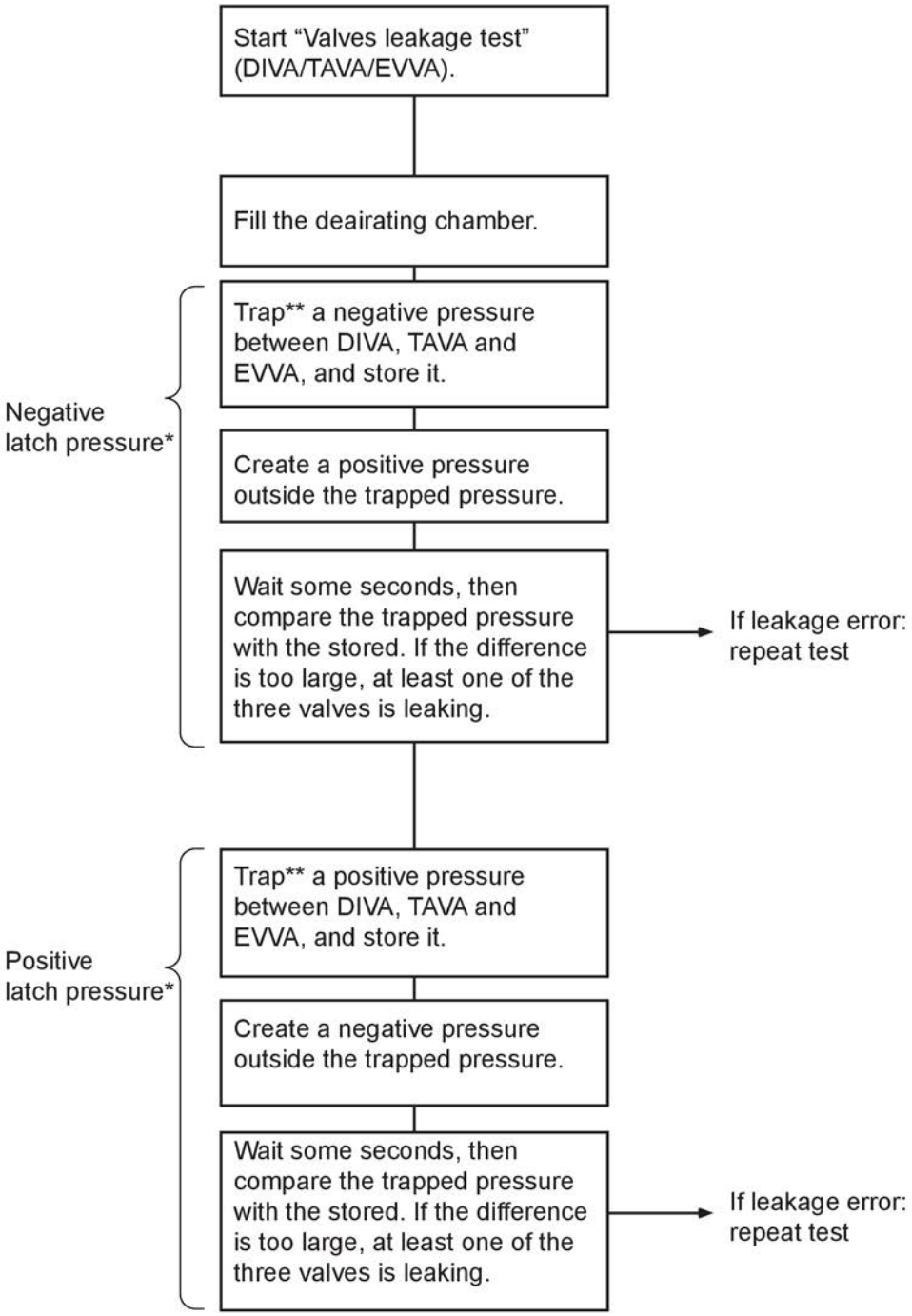

* Latch pressure = stored pressure used for comparison.

** Trap = Create a positive or negative pressure and close valves to keep the pressure between the valves.

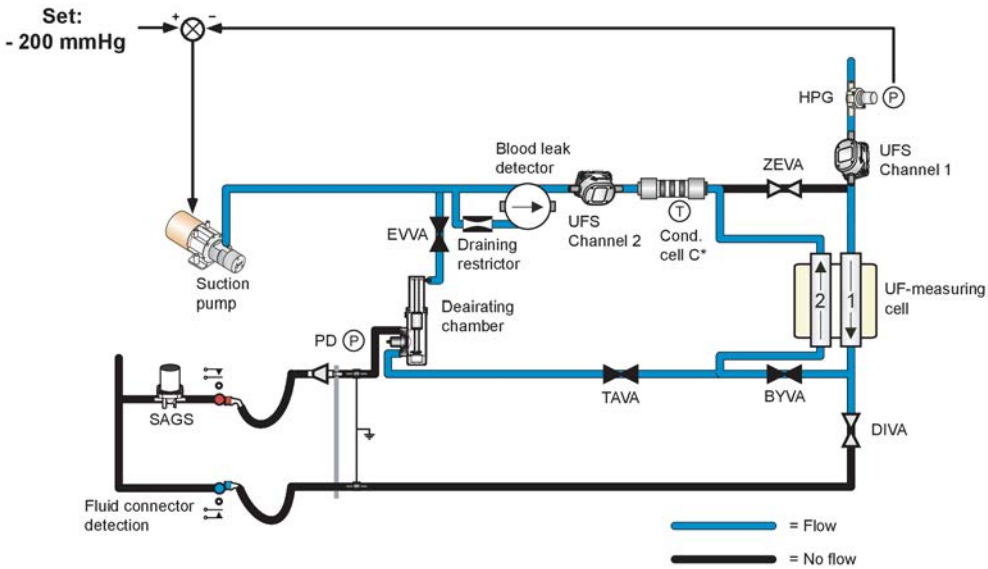

Table 12-16. Valves leakage test - phase 1

Conditions	Evaluations & Actions	Error codes
Run flow through the deaeration chamber (EVVA open).	N/A	N/A
Regulate HPG to - 200 mmHg.	Failure from control system to get stable HPG at measured value then error code.	0511 088 087
Wait for high level, max 60 seconds.	Failure to achieve high level in the deaeration chamber.	0511 088 060
Wait 10 seconds more.	Failure to keep the high level in the deaeration chamber.	0511 088 086

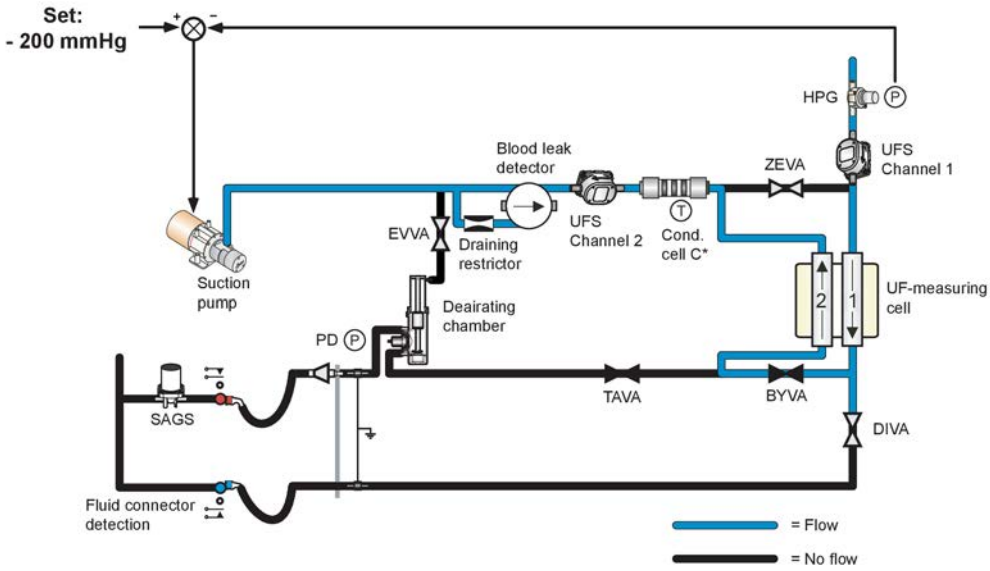

Figure 12-8. Flow path. See chapter 11: “Fluid unit - flow path”.

Table 12-17. Valves leakage test - phase 2

Conditions	Evaluations & Actions	Error codes
Close EVVA.	N/A	N/A
Wait 10 seconds.	N/A	N/A

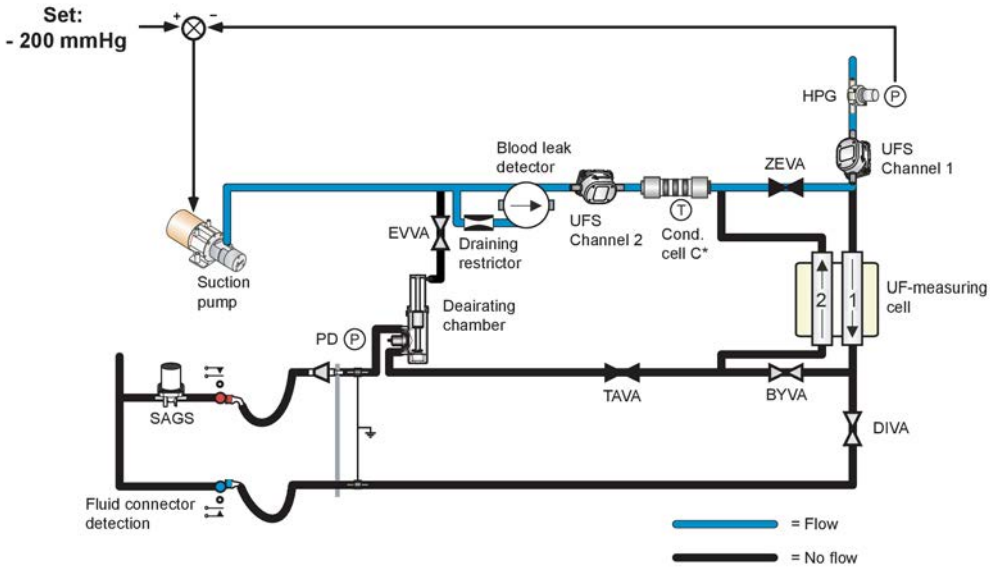

Figure 12-9. Flow path. See chapter 11: "Fluid unit - flow path".

Table 12-18. Valves leakage test - phase 3

Conditions	Evaluations & Actions	Error codes
Open ZEVA, close BYVA.	N/A	N/A
Measure the PD pressure.	Is the PD pressure stable? If not - error code.	0511 088 068
Measure the PD pressure.	If PD pressure is out of limits (-220 to -180 mmHg) then error code.	0511 088 066

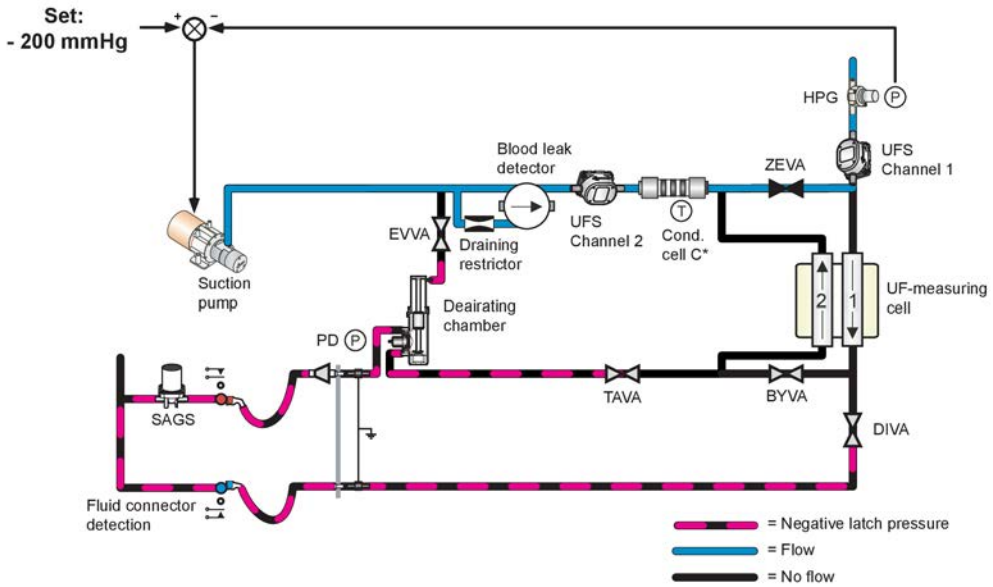

Figure 12-10. Flow path. See chapter 11: "Fluid unit - flow path".

Table 12-19. Valves leakage test - phase 4

Conditions	Evaluations & Actions	Error codes
Close TAVA.	The negative pressure is now “trapped” between DIVA, TAVA and EVVA.	N/A
Wait 4 seconds.	N/A	N/A
Store the trapped PD pressure (Latch Pressure).	N/A	N/A

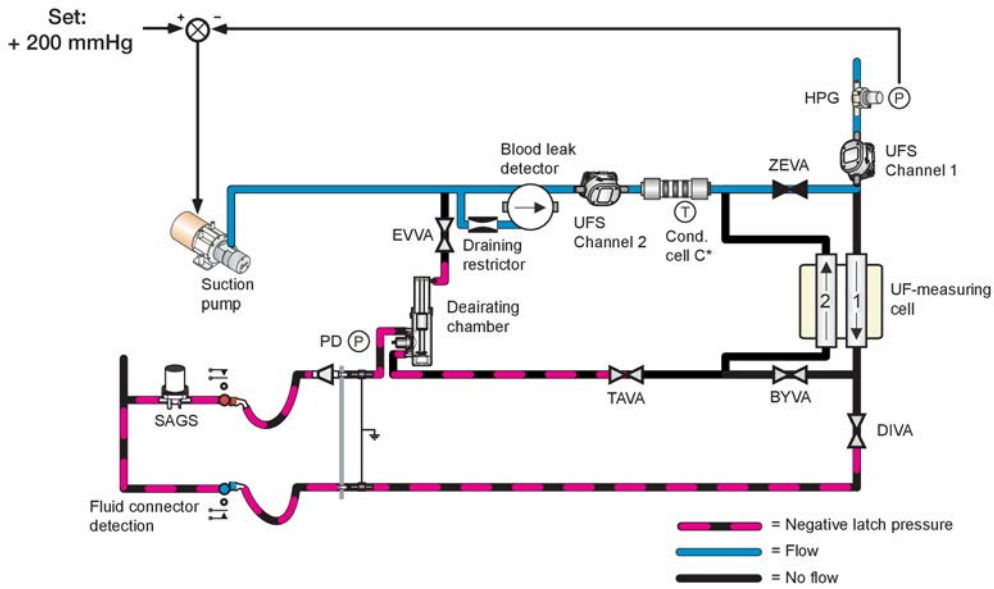

Figure 12-11. Flow path. See chapter 11: "Fluid unit - flow path".

Table 12-20. Valves leakage test - phase 5

Conditions	Evaluations & Actions	Error codes
Regulate HPG to +200 mmHg.	Failure from control system to get stable HPG at measured value.	0511 088 088
Wait 20 seconds.	N/A	N/A
PD is compared with the stored Latch Pressure.	If the difference is more than ±20 mmHg, there could be a leakage between DIVA, TAVA and EVVA.	0511 088 065

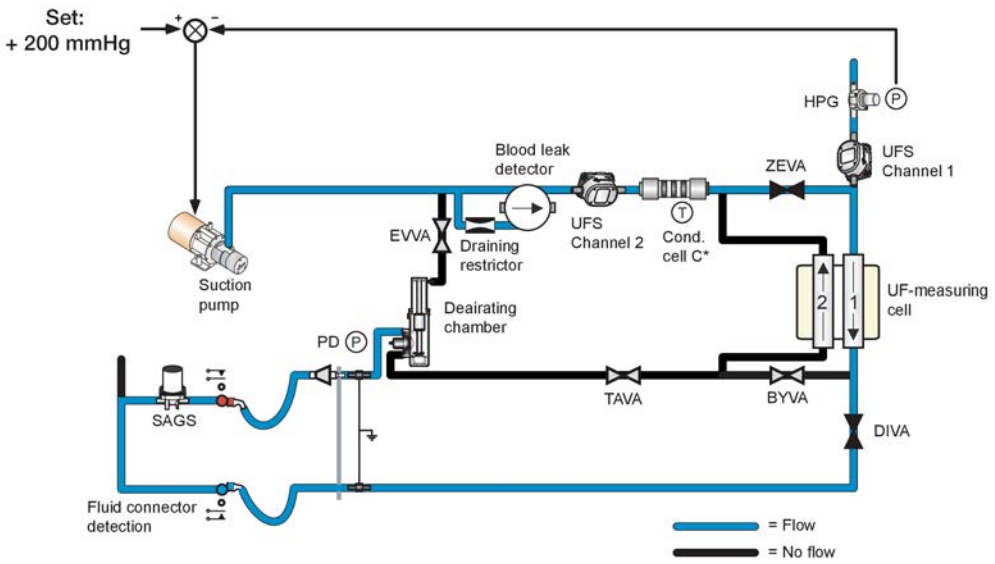

Figure 12-12. Flow path. See chapter 11: "Fluid unit - flow path".

Table 12-21. Valves leakage test - phase 6

Conditions	Evaluations & Actions	Error codes
Open DIVA.	N/A	N/A
Measure the PD pressure.	Is the PD between +195 to +235 mmHg? If not - error code.	0511 088 062
Measure the PD pressure.	Is the PD pressure stable? If not - error code.	0511 088 064
Measure the PD pressure.	Is the PD between +195 to +235 mmHg (for the second time)? If not - error code.	0511 088 063

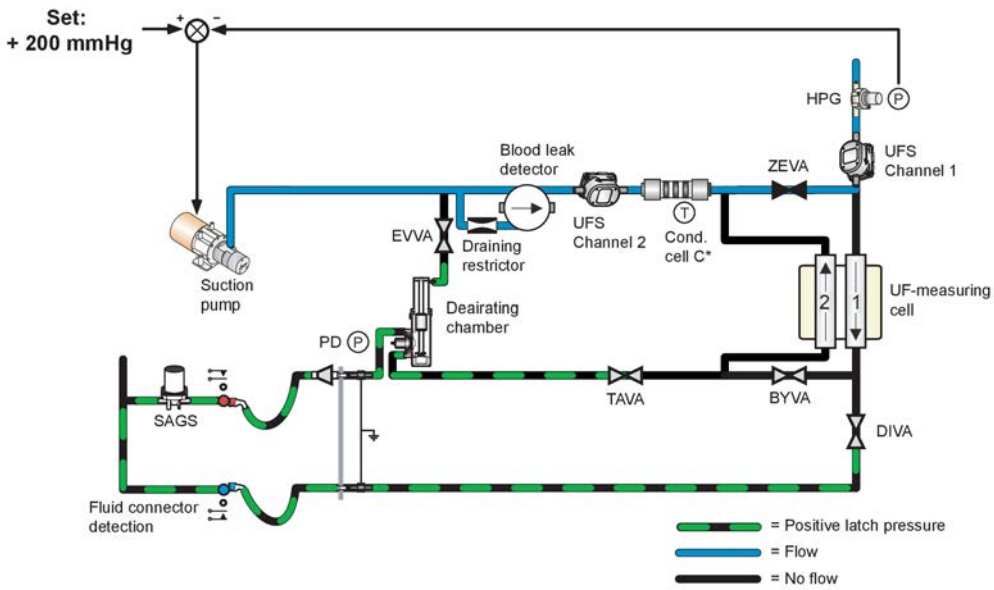

Figure 12-13. Flow path. See chapter 11: "Fluid unit - flow path".

Table 12-22. Valves leakage test - phase 7

Conditions	Evaluations & Actions	Error codes
Close DIVA.	The positive pressure is now “trapped” between DIVA, TAVA and EVVA.	N/A
Wait 4 seconds.	N/A	N/A
Store the trapped PD pressure (Latch Pressure).	N/A	N/A

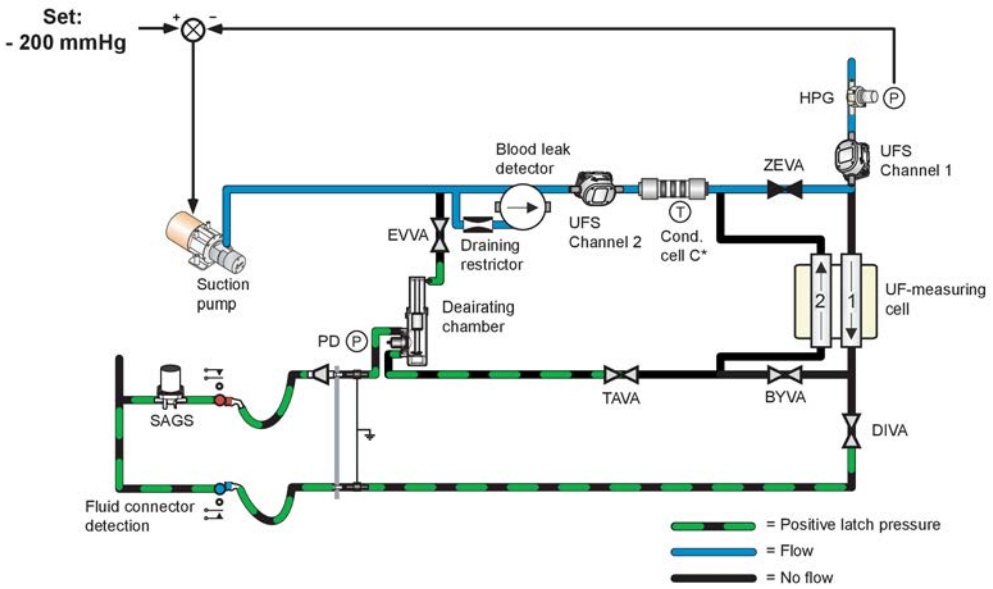

Figure 12-14. Flow path. See chapter 11: "Fluid unit - flow path".

Table 12-23. Valves leakage test - phase 8

Conditions	Evaluations & Actions	Error codes
Regulate HPG to -200 mmHg.	Failure from control system to get stable HPG at measured value.	0511 088 089
Wait 20 seconds.	N/A	N/A
PD is compared with the stored Latch Pressure.	If the difference is more than ±30 mmHg, then there could be a leakage between DIVA, TAVA and EVVA.	0511 088 061

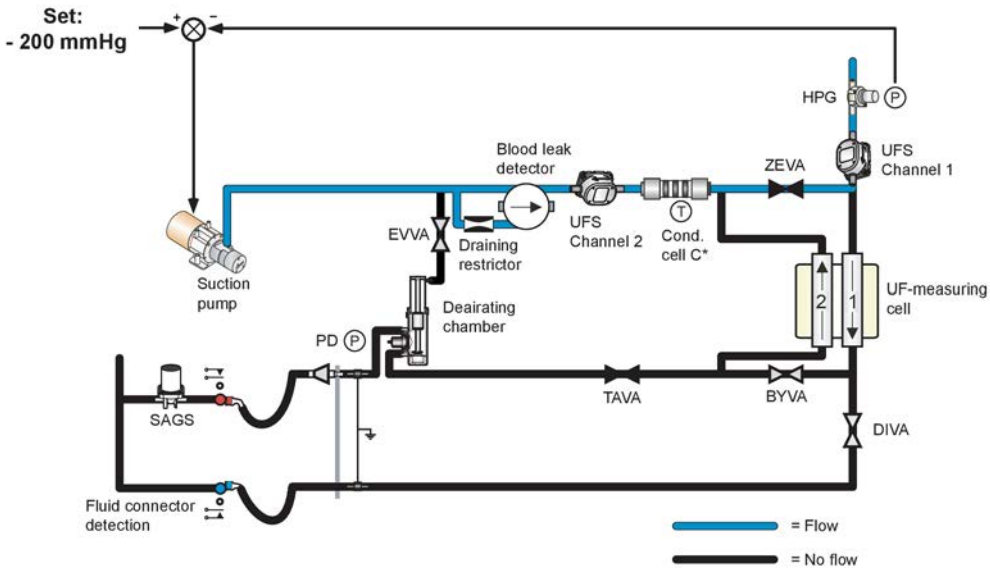

Table 12-24. Valves leakage test - phase 9

Conditions	Evaluations & Actions	Error codes
Open TAVA.	N/A	N/A
Measure the PD pressure.	Is the PD between -220 to -180 mmHg? If not - error code.	0511 088 067

12.7.3.2 Fluid path - Leakage test

This test shall be performed after exchanging the CHVA and CBVA valves. All concentrate connectors shall be connected to the machine. BiCart cartridge holder shall be closed.

Table 12-25. Fluid path - Leakage test

Conditions	Evaluations & Actions	Error codes
INVA, HBVA, ZEVA,DIVA, BYVA, TAVA, EVVA, AIVA, REVA Closed	N/A	N/A
RIVA, FLVA Open	N/A	N/A
Flow pump stopped	N/A	N/A
CHVA open and CBVA closed	Suction pump regulating HPG to -350 mmHg.	If not achieved within 90 seconds then error code 0511 088 115
Closing RIVA. Suction pump is set to constant speed creating a negative pressure of approx. -550 mmHg outside the latch pressure. Wait 4 seconds to stabilize pressure.	HPG reference value stored.	If HPG ref value > -250 mmHg then error code 0511 088 116

Conditions	Evaluations & Actions	Error codes
Wait 10 seconds.	Reference value compared with actual HPG value.	If HPG decrease >10 mmHg then error code 0511 088 117
		If HPG increase >10 mmHg then error code 0511 088 118
CHVA closed and CBVA opened. Wait 4 seconds to stabilize pressure.	HPG reference value stored.	If HPG ref value > -250 mmHg then error code 0511 088 119
Wait 10 seconds.	Reference value compared with actual HPG value.	If HPG decrease >10 mmHg error code 0511 088 120
		If HPG increase >10 mmHg then error code 0511 088 121

12.7.4 Temperature test

12.7.4.1 Test objective

The purpose of the **Temperature test** is to verify that the protective system is able to detect a too high dialysis fluid temperature during the treatment.

12.7.4.2 High temperature test

The high temperature test measures the correlation between TempB (control system) and TempP (protective system).

Table 12-26. High temperature test

Conditions	Evaluations & Actions	Error codes
Fluid temperature: <45 °C	Test continues as soon as temperature is <45 °C . Time out 5 minutes.	Attention
Fluid temperature: <45 °C	Stable temperature at the Protective System, ±0.2 °C, repeat until error code. Time out 20 seconds for each try.	0511 088 057
Temp Set >48 °C	The Control system now regulates the temperature to 48 °C. When the value is stable, ±0.25 °C on the Control System the value is sent to the Protective System. Time out 15 minutes.	0511 088 092 0511 088 093
Temp Set >48 °C	The Protective system measures the temperature and compares it to the control system. If it is outside the limits, -1.3 °C, +0.6 °C, repeat the test until error code is generated.	0511 088 055
Temp Set >45 °C	The Protective system check that the temperature is above 45 °C. If it is lower than 45 °C, repeat the test until error code is generated. Time out for each test 20 seconds.	0511 088 056

12.7.4.3 Low temperature test

The low temperature test starts as soon as the tempP has decreased below 39 ºC after the high temperature test is finished. If this isn't achieved within 5 minutes following attention is generated:

```
546 Functional check is on hold
Water temperature is too high.
```

The low temperature test measures the correlation between TempB (control system) and TempP (protective system) despite that the temperature is fluctuating. This is done by calculating a predicted value of TempP (predTempP) by using the measured temperature at TempB.

The correlation test is performed between predTempP and TempP. (±0.8 °C during a total of 1 minutes).

A time out is used at this stage. The error code 0511 088 058 is generated when timer has reached 6 minutes.

The low temperature test shall be passed successfully before the green fluid path can be achieved.

12.7.5 Blood leak detector test

The primary concept for blood leak detection is light absorption. The specific amount of light absorption by haemoglobin is compared to a calibrated pre-set threshold. The protective system is used to manage and validate the electrical signals.

During functional check, the AK 98 dialysis machine checks if the blood leak detector is dirty or out of function.

Table 12-27. Blood leak Detector test

Conditions	Evaluations & Actions	Error codes
Blood leak detector LED is enabled	The blood leak value is measured; if it is unstable, repeat test until error code is generated.	0511 088 007
Blood leak detector LED is enabled	If the blood leak value is not close to zero (-10 to +60), repeat test until error code is generated.	0511 088 005
Blood leak detector LED is disabled	The blood leak value is measured; if it is unstable repeat test until error code is generated.	0511 088 006
Blood leak detector LED is disabled	If the blood leak receiver voltage is more than 2 mV, repeat test until error code is generated.	0511 088 004

12.7.6 Conductivity test

12.7.6.1 Sub-tests

The conductivity is checked at two values:

- Low conductivity test, refer to Section 12.7.6.2 "Low conductivity test" on page 265

- High conductivity test, refer to Section 12.7.6.3 “High conductivity test” on page 266

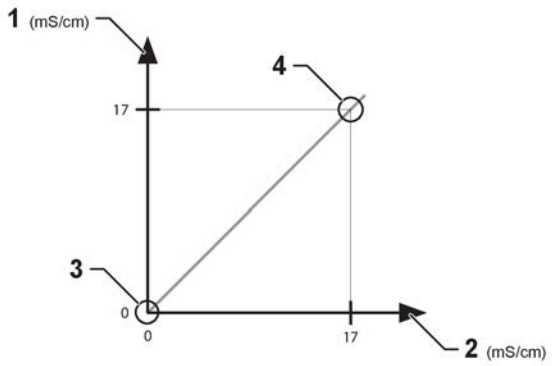

Figure 12-15. Conductivity test.

1. Measured conductivity
2. Measured conductivity
3. Conductivity low test
4. Conductivity high test

12.7.6.2 Low conductivity test

The Conductivity Low test is started when fluid reaches the HPG pressure sensor.

The term stable means that the value is not fluctuating more than 0.3 mS/cm during 10 seconds:

Table 12-28. Low conductivity test

Conditions	Evaluations & Actions	Error codes
No concentrate in the fluid path	The Control system’s measured conductivity (conductivity B) is sent to the Protective system when the B value is stable. If the conductivity value is not stable, the test is repeated until error code is generated.	0511 088 085
No concentrate in the fluid path	The Protective system measures the conductivity (conductivity P). If it is unstable, repeat the test until error code is generated.	0511 088 029
No concentrate in the fluid path	The Protective system measures the conductivity (conductivity P). If it is higher than 5 mS/cm, repeat the test until error code is generated.	0511 088 028
No concentrate in the fluid path	The conductivity values are compared. If the difference is higher than the limit (see following table), repeat the test until error code is generated.	0511 088 027

Table 12-29. Limits for the Conductivity test

N/A	Conductivity Cell A	Conductivity Cell B	Conductivity Cell P
Conductivity Cell A	N/A	±0.3 mS/cm *	±1.0 mS/cm *
Conductivity Cell B	±0.3 mS/cm *	N/A	±1.0 mS/cm
Conductivity Cell P	±1.0 mS/cm *	±1.0 mS/c	N/A

*(only performed in Bicarbonate mode)

The dialysis fluid tubes shall remain connected to the safety couplings of the machine until "`Function check`" disappears from the machine state indicator.

NOTE!
If the ultrafilter (option) is installed, the dialysis fluid tubes shall remain connected to the safety couplings until the bypass path of the Flow Diagram lights up green.

12.7.6.3 High conductivity test

An attention informs the user that concentrate can be supplied:

```
593 Time to prepare for treatment
Connect concentrates.
```

Appears:

During functional check when the concentrates have not been connected to the machine.

Machine actions:

The functional check is stopped. When the concentrates have been connected, the functional check will automatically continue.

NOTE!
In order to finalize the functional check, the A-concentrate shall be connected and the venous drip chamber filled to the correct level. The reason for this is that the conductivity cells shall be checked for conductivity, and the air detector shall be checked with fluid in the chamber. When the functional check is finished, the treatment time appears on the time display.

NOTE!
Fixed conductivity alarm limits (±5 %) will be set automatically, centred around the conductivity set value.

Table 12-30. High conductivity test

Conditions	Evaluations & Actions	Error codes
Concentrate connected	Fixed calculated conc. pump speed, depending on selected concentrate. The stable conductivity value is sent from control syctem (conductivity B) to protective system. If not stable repeat the test until error code is generated.	0511 088 095
Concentrate connected	The control system measures the conductivity (conductivity B). If it is unstable, repeat the test until error code is generated.	0511 088 108

Conditions	Evaluations & Actions	Error codes
Concentrate connected	The protective system measures the conductivity (conductivity P). If it is unstable, repeat the test until error code is generated.	0511 088 026
Concentrate connected	The protective system measures the conductivity (conductivity P). If it is lower than 17 mS/cm, repeat the test until error code is generated.	0511 088 025
Concentrate connected	The conductivity values are compared. If the difference is higher than the limit (see below), repeat the test until error code is generated.	0511 088 024
Concentrate connected	If the high conductivity test is not passed within 20 minutes the error code is generated.	0511 088 109

Table 12-31. Limits for the Conductivity test:

N/A	Conductivity Cell A	Conductivity Cell B	Conductivity Cell P
Conductivity Cell A	N/A	±0.3 mS/cm *	±1.0 mS/cm *
Conductivity Cell B	±0.3 mS/cm *	N/A	±1.0 mS/cm
±1.0 mS/cm * ±1.0 mS/c *	±1.0 mS/cm *	±1.0 mS/c	N/A

*(only performed in Bicarbonate mode)

After the approval of the test, the AK 98 dialysis machine will wait for the conductivity to drop below 2mS/cm. This will trigger the start of BiCart cartridge priming.

When the BiCart cartridge priming is finished, the machine starts to regulate the conductivity to the set value.

12.7.7 Degassing pressure test

12.7.7.1 Test objectives and conditions

The two main objectives of the degassing pressure transducer test are:

- To verify that the degassing pressure reading is stable.
- To perform a correlation test between the degassing pressure transducer and the HPG.

The HPG and PD transducer readings were correlated earlier in the functional check - in the DIVA/TAVA/EVVA Valves leakage test.

In this test (degassing pressure test) the HPG and degassing pressure transducer readings are correlated.

The test conditions are set up by stopping the flow pumps and by closing BYVA, DIVA, REVA, AIVA, ZEVA, HBVA and then opening INVA.

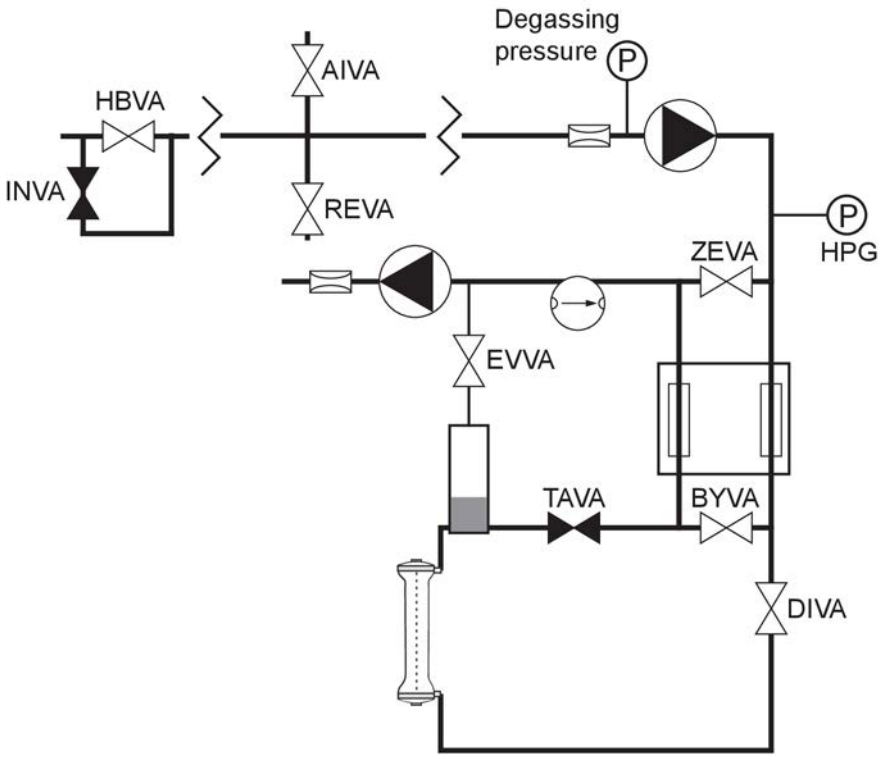

Figure 12-16. Degassing pressure test conditions

12.7.7.2 Test description

Table 12-32. Degassing pressure test description

Condition	Evalutations and actions	Error code
INVA opens		
Measure HPG pressure	INVA closes if: ● the pressure exceeds more than +150 mmHg before a 15 seconds time-out ● HPG doesn't exceed +150 mmHg within 15 seconds.	
2 seconds delay		
Degassing pressure sample is stored		

Condition	Evalutations and actions	Error code
For the next 3 seconds the actual degassing pressure is compared to the stored sample and to the HPG Pressure: 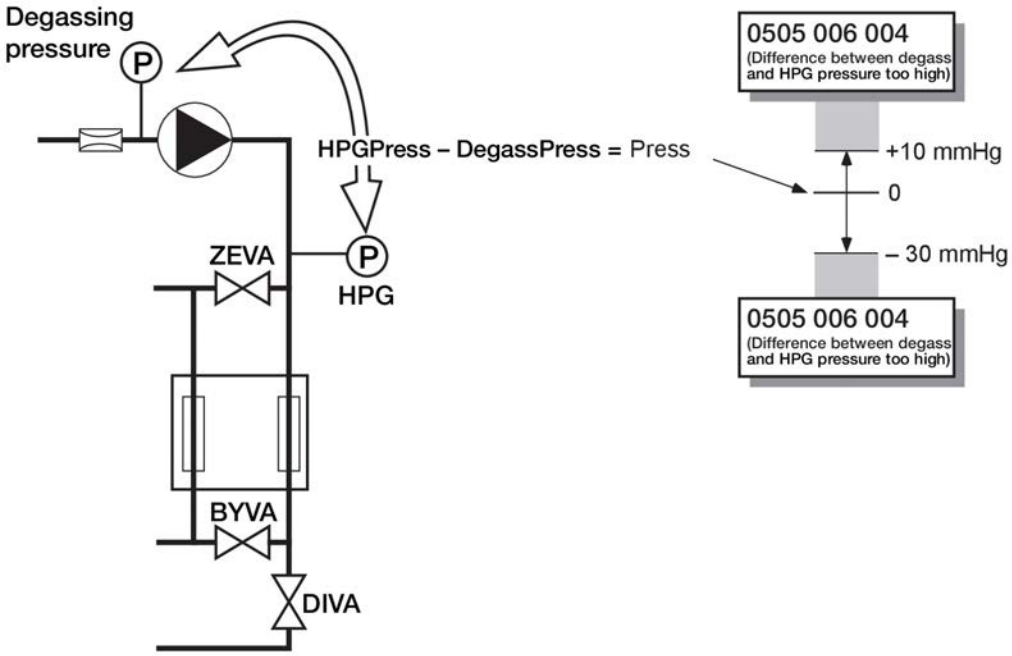 *Figure 12-17. P: Degassing pressure transducer, 0505 006 004: difference between degassing pressure and HPG pressure is too high.*		
	If the actual degassing pressure differs more than ±20 mmHg from the stored sample value, the pressure is considered unstable. The test is repeated from the beginning, max. 5 times.	0505 006 003
	The difference between HPG and degassing pressure has been too big (-30 mmHg to +10 mmHg).	0505 006 004

This test ensures that the degassing pressure transducer reads the same as the HPG (within narrow limits).

12.7.8 AIVA test

This is, in some ways, a simple current measuring test, but opening AIVA also allows the system to check if the level detector in the deaerating chamber can register low level. Opening AIVA will pull air into the flow path. After a while it will end up in the deaerating chamber, creating a low level alarm in the deaerating chamber

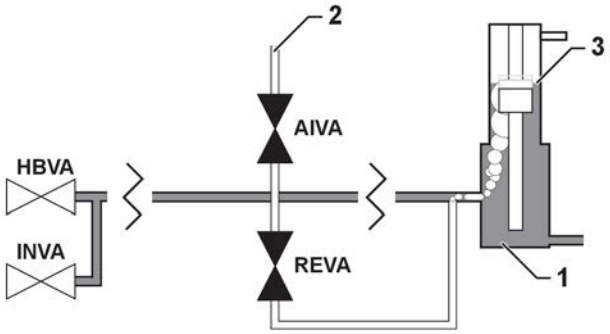

Figure 12-18. AIVA test conditions

1. Deaerating chamber
2. Air inlet
3. Dropping fluid level

High level active - 0505 018 004

General description of conditions for occurring:

- AIVA and REVA opened, INVA and HBVA closed.
- Suction pump active and fluid tubes connected to safety bypass.
- Low level in deaerating chamber is not achieved within 90 seconds.
- The status from level sensor indicates high level in chamber.

High level active - 0505 018 004

General description of conditions for occurring:

- AIVA and REVA opened, INVA and HBVA closed.
- Suction pump active and fluid tubes connected to safety bypass.
- Low level in deaerating chamber is not achieved within 90 seconds.
- The status from level sensor indicates high level in chamber.

High level and low level not active - 0505 018 005

General description of conditions for occurring:

- AIVA and REVA opened.
- Suction pump active and fluid tubes connected to safety bypass.
- Low level in deaerating chamber is not achieved within 90 seconds.
- The status from level sensor indicates middle level in chamber.

12.7.9 DIVA/TAVA/EVVA closing test

Procedure

1) EVVA/DIVA is opened, TAVA/BYVA closed.
2) Control is requested to build up a negative pressure of -200 mmHg.
3) Protective waits at most 10 seconds to get a high level bubble in deairating chamber.
4) Protective waits at most 10 seconds for PD_PRESSURE to reach below 0 mmHg.

5) TAVA/EVVA/DIVA are closed, BYVA is opened.

6) Protective waits 3 seconds for pressure to stabilize and measures PD_PRESSURE.

7) Control is requested to build up a positive pressure of +200 mmHg.

8) Protective waits at most 10 seconds for HPG_PRESSURE to reach above +100 mmHg.

9) Protective compares current PD_PRESSURE and compares it to reference value. A difference of at most 50 mmHg is accepted.

12.7.10 UF Supervision test

12.7.10.1 Overview

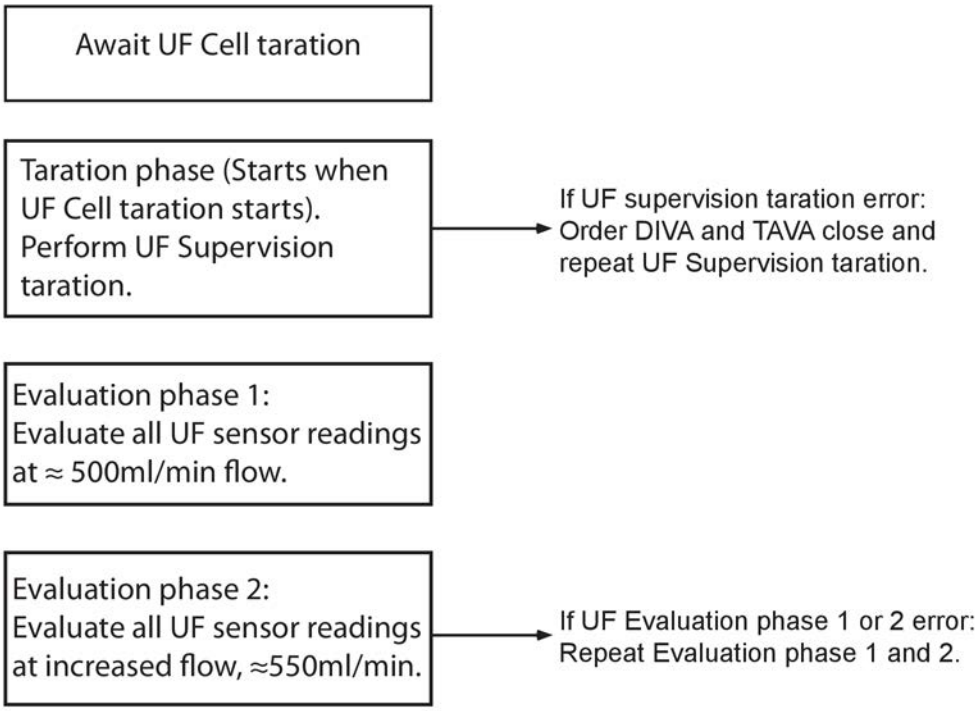

12.7.10.2 UF Supervision taration phase

During the UF Supervision taration phase the offset in flow reading between the UF Supervision flow sensors is measured and compared with a derived value from previous function checks.

Conditions	Evaluation & actions	Error code
Dialysis fluid flow, temperature and conductivity is kept constant.	Difference in UF Supervision sensors reading shall not deviate more than 9 mL/min from earlier function checks derived value.	0511 088 129

If there is no stored data from previous function check (e.g. new UF supervision flow sensors installed) a “self-learning” of the offset is performed by running 2-4 tarations until the variance is sufficiently small. In this special case the evaluation during the taration phase is not performed. Any UF Supervision flow sensor abnormalities will instead be detected in the Evaluation phases.

12.7.10.3 UF Supervision evaluation phase 1

Evaluation phase 1 is performed with a nominal fluid flow of 500 mL/min. All UF flow channel readings (control as well as protective) are evaluated.

Conditions	Evaluation & actions	Error code
Dialysis fluid flow, temperature and conductivity is kept constant.	Difference in flow reading between any of the flow sensors shall not exceed 30 mL/min.	0511 088 130

12.7.10.4 UF Supervision evaluation phase 2

Evaluation phase 2 is performed with a nominal fluid flow of 550 mL/min. All UF flow channel readings (control as well as protective) are evaluated.

Conditions	Evaluation & actions	Error code
Dialysis fluid flow, temperature and conductivity is kept constant at a ≈ 50 mL/min higher flow than Evaluation phase 1.	Difference in flow reading between UF Supervision flow sensors shall not deviate more than 3 mL/min from the taration phase.	0511 088 130
	Evaluate increase in flow reading from Evaluation phase 1. No UF Supervision flow sensor reading increase shall deviate more than 5.1 mL/min from any of UF Cell flow sensor increase.	
	Dialysis fluid flow must be at least 40 mL/min higher than the flow used in Evaluation phase 1, otherwise a further increase in flow is requested.	N/A

12.7.10.5 UF Supervision function check time out

When the UF Cell taration is completed a timer is started to measure the time duration of the UF Supervision function check i.e. Evaluation phase 1 and Evaluation phase 2, but also UF supervision taration repetition if UF Supervision taration is not OK during the UF Cell taration.

Conditions	Evaluation & actions	Error code
UF Supervision taration time is measured.	UF Supervision time duration from UF Cell taration completion shall not exceed 10min.	0511 088 131

12.7.11 Blood leak clean test

This test is performed by enabling the LED. The value should be <30. If not an attention will be issued:

```
507 Blood leak detector failure
Clean detector and press Confirm.
```

12.8 Automatic restart of the FM functional check

In some cases when an error code is issued, it can be enough to restart the machine to make the monitor pass the functional check. To avoid the need of manually restart an automatic restart of the FM functional check is performed.

Instead of generating a technical error, the monitor automatically restarts the fluid part of the functional check. A silent attention is generated informing the operator that the functional check has been restarted. The attention is active until green fluid path is achieved or confirmed by the operator. As a consequence of the restart of the FM functional check, the functional check is prolonged.

In addition a silent error code (no technical alarm) is stored in the error code buffer indicating which test caused restart of the functional check. If the same error occurs again in the following functional check, the monitor will issue an error code the usual way.

The restart of FM functional check is used for the following error codes in functional check:

Table 12-33. Error codes in functional check

Temperature tests	DIVA/TAVA TEST	Unstable degassing pressure
0511 088 055	0511 088 061	0505 006 003
0511 088 056	0511 088 065	N/A
0511 088 092	0511 088 086	N/A
N/A	0511 088 088	N/A

Silent error codes stored in the error buffer due to a hydraulic restart:

Table 12-34. Silent error codes

Temperature tests	DIVA/TAVA TEST	Unstable degassing pressure
0512 088 055	0512 088 061	0512 006 003
0512 088 056	0512 088 065	N/A
0512 088 092	0512 088 086	N/A
N/A	0512 088 088	N/A

This page is intentionally left blank.